HAUCK STARJET BURNER
SJ075 – SJ980

WARNING

These instructions are intended for use only by experienced, qualified combustion start-up personnel. Adjustment of this equipment by unqualified personnel can result in fire, explosion, severe personal injury or even death.

To make changes to the burner linkages or adjust firing inputs: 1. Shut the burner down; 2. Make changes; 3. Restart the burner. **STAND CLEAR OF THE BURNER WHEN OPERATING UNDER ANY FIRING CONDITIONS.**

TABLE OF CONTENTS

	Subject	Page
A.	General Information	2
B.	Receiving and Inspection	2
C.	Burner Capacities	3
D.	Dimensions	5
E.	Component Identification	9
F.	Burner Mounting	10
G.	Fuel Manifold Installation	12
H.	Natural Gas Fuel Piping System	13
I.	Light Fuel Oil Piping System	17
J.	Heavy Fuel Oil Piping System	20
K.	Heavy Oil Insert Heater	24
L.	Fuel Oil Nozzle Adjustment	26
M.	Compressed Air/Oil System	27
N.	Liquid Propane (LP) Fuel Piping System	32
O.	Burner Pilot System	40
P.	Operation	41
Q.	Flame Shape Adjustments	45
R.	Flame Holder Cone Adjustment	46
S.	Maintenance	47
T.	Recommended Spare Parts	48
	Required Reference: Appropriate Burner Performance Table	
	GJ73 - Dryer Drum Gas Analysis	

These instructions are intended to serve as guidelines covering the installation, operation, and maintenance of Hauck equipment. While every attempt has been made to ensure completeness, unforeseen or unspecified applications, details, and variations may preclude covering every possible contingency. **WARNING: TO PREVENT THE POSSIBILITY OF SERIOUS BODILY INJURY, DO NOT USE OR OPERATE ANY EQUIPMENT OR COMPONENT WITH ANY PARTS REMOVED OR ANY PARTS NOT APPROVED BY THE MANUFACTURER.** Should further information be required or desired or should particular problems arise which are not covered sufficiently for the purchaser's purpose, contact Hauck Mfg. Co.

WARNING

This equipment is potentially dangerous with the possibility of serious personal injury and property damage. Hauck Manufacturing Company recommends the use of flame supervisory equipment and fuel safety shutoff valves. Furthermore, Hauck urges rigid adherence to National Fire Protection Association (NFPA) standards and insurance underwriter's requirements. Operation and regular preventative maintenance of this equipment should be performed only by properly trained and qualified personnel. Annual review and upgrading of safety equipment is recommended.

A. GENERAL INFORMATION

The Hauck StarJet Burner combines reliable operation with a unique, adjustable flame shaping feature, eliminating the weight and maintenance problems of ignition tiles. Matching burner flame shape to dryer design is the real secret to overall dryer efficiency. Some dryers work best with a long, narrow, hard driving flame, while other dryers with the same rated capacity require a short bushy, turbulent flame. Frequently, problems such as overheating of the combustion chamber, excessive exhaust gas temperatures, and poor heat transfer can be eliminated by shaping the burner flame. The burners in the StarJet series have an extremely wide range of flame shape adjustment.

Burner air consists of primary air (atomizing air) and secondary air. Both are supplied by the Hauck Turbo Blower. The plant exhaust air provides the remaining air required for complete combustion and exhaust gas removal.

The StarJet will burn all clean commercial grades of fuel oil, natural gas, landfill gas, and liquid propane. The burner provides a 7 to 1 turndown from the maximum firing rate.

NOTE

StarJet burners firing liquid propane and heavier fuel oils could have less than 7 to 1 turndown.

Flight design in the combustion zone is important. The combustion zone should be clear of veiling material and large enough to accommodate complete combustion. Consult Hauck for recommended combustion zone requirements.

B. RECEIVING AND INSPECTION

Upon receipt, check each item on the bill of lading and/or invoice to determine that all equipment has been received. A careful examination of all parts should be made to ascertain if there has been any damage in shipment.

IMPORTANT

If installation is delayed and the equipment is stored outside, provide adequate protection as dictated by climate and period of exposure. Special care should be given to all motors and bearings, if applicable, to protect them from rain or excessive moisture.

C. BURNER CAPACITIES

Refer to burner performance table.

Burner Model	Air Flow (scfm)	Pressure (osig)	TBA Blower Model	Motor HP	Fan Rating (acfm @ 350°F)	Max. Capacity (MMBtu/hr)
SJ075	1,200	36	TBA - 36 - 20	20	8,600	15.2
SJ150	1,832	36	TBA - 36 - 25	25	16,000	27.9
SJ200	2,800	37	TBA - 36 - 40	40	23,000	40.5
SJ260	3,500	36	TBA - 36 - 50	50	28,000	49.3
SJ360	5,400	37	TBA - 36 - 75	75	43,000	75.6
SJ520	7,300	36	TBA - 36 - 100	100	55,000	96.8
SJ580	7,900	33	TBA - 36 - 100	100	68,000	120
SJ750	9,940	38	TBA - 36 - 125	125	85,000	150
SJ980	12,220	36	TBA - 36 - 150	150	128,000	200

Table 1. StarJet Burner Capacities with High Pressure Direct Drive Blowers

Capacity Table Notes:

1. Oil capacities based on Higher Heating Value (HHV) of 138,000 Btu/gal and viscosity of oil delivered at the burner of 90 SSU or lower.
2. Gas capacities based on HHV of 1,040 Btu/ft^3 and 5 psig manifold inlet pressure with a 3 psig drop across manifold.
3. Liquid propane capacities based on HHV of 91,044 Btu/gal and 50 psig above vapor pressure at inlet of LP burner control valve (butane and 50/50 propane/butane mixture capacities available upon request).
4. Burner capacities based on standard air density: sea level (29.92" Hg) at 70°F. Correction factors must be applied for altitude/temperature variations; consult Hauck.
5. Only 40% of air for combustion is passed through the burner. The remaining 60% of air for combustion plus a minimum of 20% excess air must be induced by the dryer exhaust system at a negative 0.25" wc at the burner/breeching ring.
6. Horsepower rating is based on Hauck blower performance. Blowers of other manufacturers may be used, however, higher horsepower motors may be required as a result of lower efficiencies.
7. "E", "F" & "G" Model burners can be accurately monitored for air flow by using the body pressure P1 test point with an accurate osig pressure gauge. Burners equipped with a blower inlet orifice can be monitored for air flow using a draft gauge capable of reading negative 3" wc. Readings can be related to scfm on corresponding burner charts.
8. Burners equipped with a gas orifice meter can be accurately checked for gas flow by measuring the differential pressure across the orifice meter with a U-tube device capable of reading 0-20"wc. Readings can be related to gas flow using corresponding Burner Performance Tables under gas orifice $\triangle$P ("wc) and gas flow (scfh).

C. BURNER CAPACITIES (METRIC)

Burner Model	Air Flow (nm^3/min)	Pressure (kPa)	TBA Blower Model	Motor HP	Fan Rating (am^3/min @ 177°C)	Max. Capacity (kW)
SJ075	32.1	15.5	TBA - 36 - 20	20	230	4,020
SJ150	49.1	15.5	TBA - 36 - 25	25	429	7,380
SJ200	75.0	15.9	TBA - 36 - 40	40	616	10,700
SJ260	93.8	15.5	TBA - 36 - 50	50	750	13,000
SJ360	145	15.9	TBA - 36 - 75	75	1,150	20,000
SJ520	196	15.5	TBA - 36 - 100	100	1,470	25,600
SJ580	212	14.2	TBA - 36 - 100	100	1,820	31,700
SJ750	266	16.4	TBA - 36 - 125	125	2,280	39,700
SJ980	327	15.5	TBA - 36 - 150	150	3,430	52,900

Table 2. StarJet Burner Capacities with High Pressure Direct Drive Blowers

Metric Capacity Table Notes:

1. Oil capacities based on Lower Heating Value (LHV) of 36.17 MJ/ℓ and viscosity of oil delivered at the burner of 1.8 $x10^{-5}$ m^2/sec or lower.
2. Gas capacities based on LHV of 36.96 MJ/nm^3 and 34.5 kPa manifold inlet pressure with a 20.7 kPa drop across manifold.
3. Liquid propane capacities based on LHV of 23.83 MJ/ℓ and 345 kPa above vapor pressure at inlet of LP burner control valve (butane and 50/50 propane/butane mixture capacities available upon request).
4. Burner capacities based on standard air density: sea level (760mm Hg) at 21°C. Correction factors must be applied for altitude/temperature variations; consult Hauck.
5. Only 40% of air for combustion is passed through the burner. The remaining 60% of air for combustion plus a minimum of 20% excess air must be induced by the dryer exhaust system at a negative 6.3mm wc at the burner/breeching ring.
6. Horsepower rating is based on Hauck blower performance. Blowers of other manufacturers may be used, however, higher horsepower motors may be required as a result of lower efficiencies.
7. "E", "F" & "G" Model burners can be accurately monitored for air flow by using the body pressure P1 test point with an accurate kPa pressure gauge. Burners equipped with a blower inlet orifice can be monitored for air flow using a draft gauge capable of reading negative 76mm wc. Readings can be related to nm^3/hr on corresponding burner charts.
8. Burners equipped with a gas orifice meter can be accurately checked for gas flow by measuring the differential pressure across the orifice meter with a U-tube device capable of reading 0-500mm wc. Readings can be related to gas flow using corresponding Burner Performance Tables under gas orifice $\triangle P$ (mm wc) and gas flow (m^3/hr).

D. DIMENSIONS

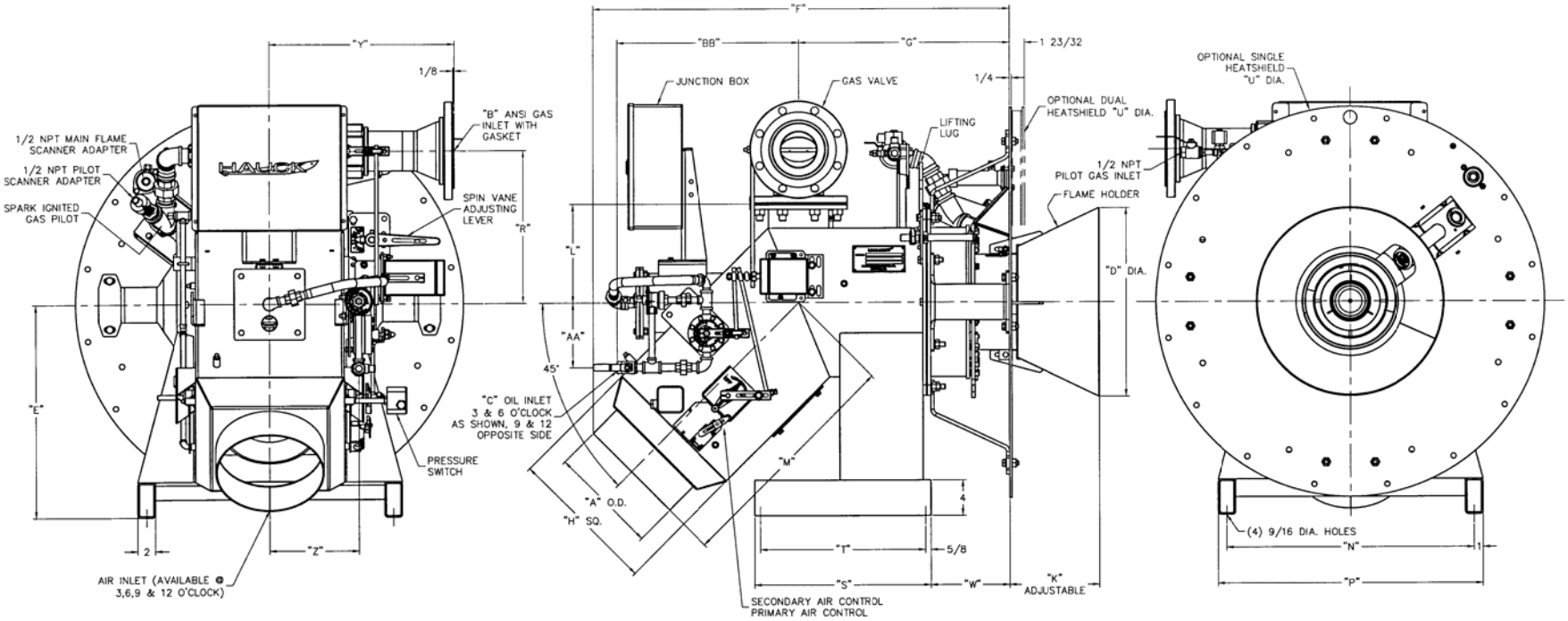

Figure 1. Dimensions SJ075 – SJ580

MODEL NO.	"A"	"B"	"C"	"D"	"E"	"F"	"G"	"H"	"K"	"L"	"M"	"N"	"P"	"R"	"S"	"T"	"U"	"W"	"Y"	"Z"	"AA"	"BB"
SJ4075	8 1/4	2 1/2	1/2	17 1/4	24	39	22 3/4	12 1/4	6 TO 7	8 1/8	20	22	24	15 1/16	15	13 3/4	34	5 7/8	12 5/8	7 7/8	6 9/16	18 5/16
SJ4150									9 3/4 TO 10 3/4													
SJ4200	10 1/4	4				43	22 7/8	14 1/4	6 1/2 TO 9 1/2	9 7/8	24 3/4	26	28	16 13/16	20	18 3/4	44	8 7/8	15 1/8	8 7/8		18 5/8
SJ4260				19 1/2					8 1/2 TO 9 1/2													
SJ4360	12 1/4	6		21		47 1/8	23 7/8	16 3/4	10 1/4 TO 11 1/4	11 1/8	26 3/4	28	30	18 1/16					20 5/8	10 1/8	7 3/8	20 7/16
SJ4520			1	21 3/4																10 1/4	8 7/8	23 1/8
SJ4580																						

Y4060
(NOT TO SCALE)

D. DIMENSIONS (Continued)

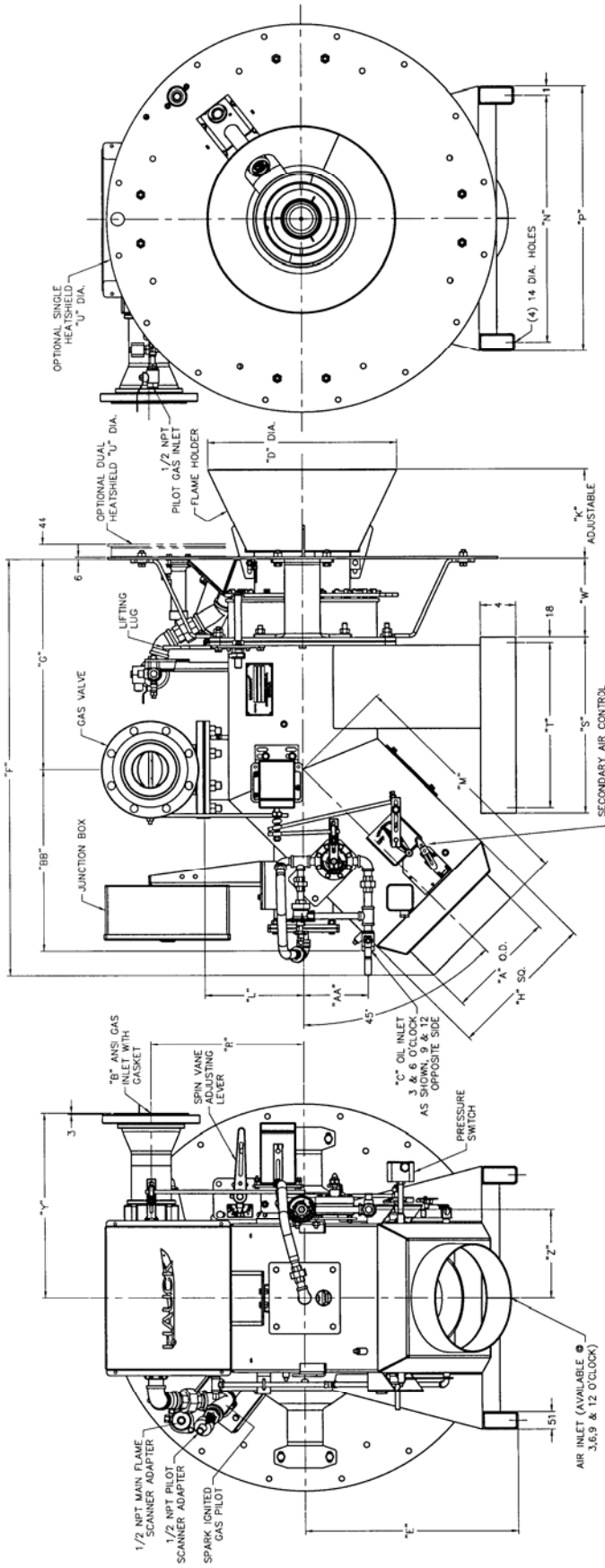

MODEL NO.	"A"	"B"	"C"	"D"	"E"	"F"	"G"	"H"	"K"	"L"	"M"	"N"	"P"	"R"	"S"	"T"	"U"	"W"	"Y"	"Z"	"AA"	"BB"
SJ4075	210	2 1/2	1/2	438	610	991	578	311	152 TO 178 248 TO 273	206	508	559	610	383	381	349	864	149	321	200	167	465
SJ4150																						
SJ4200	260	4		495		1092	581	362	165 TO 241 216 TO 241	251	629	660	711	427	508	476	1118	225	384	225		473
SJ4260																						
SJ4360	311	6		533		1197	606	425	260 TO 286	283	679	711	762	459					524	257	187	519
SJ4520			1	552																260	225	587
SJ4580																						

Y4060 METRIC
(NOT TO SCALE)

Figure 2. Metric Dimensions SJ075 – SJ580

D. DIMENSIONS (Continued)

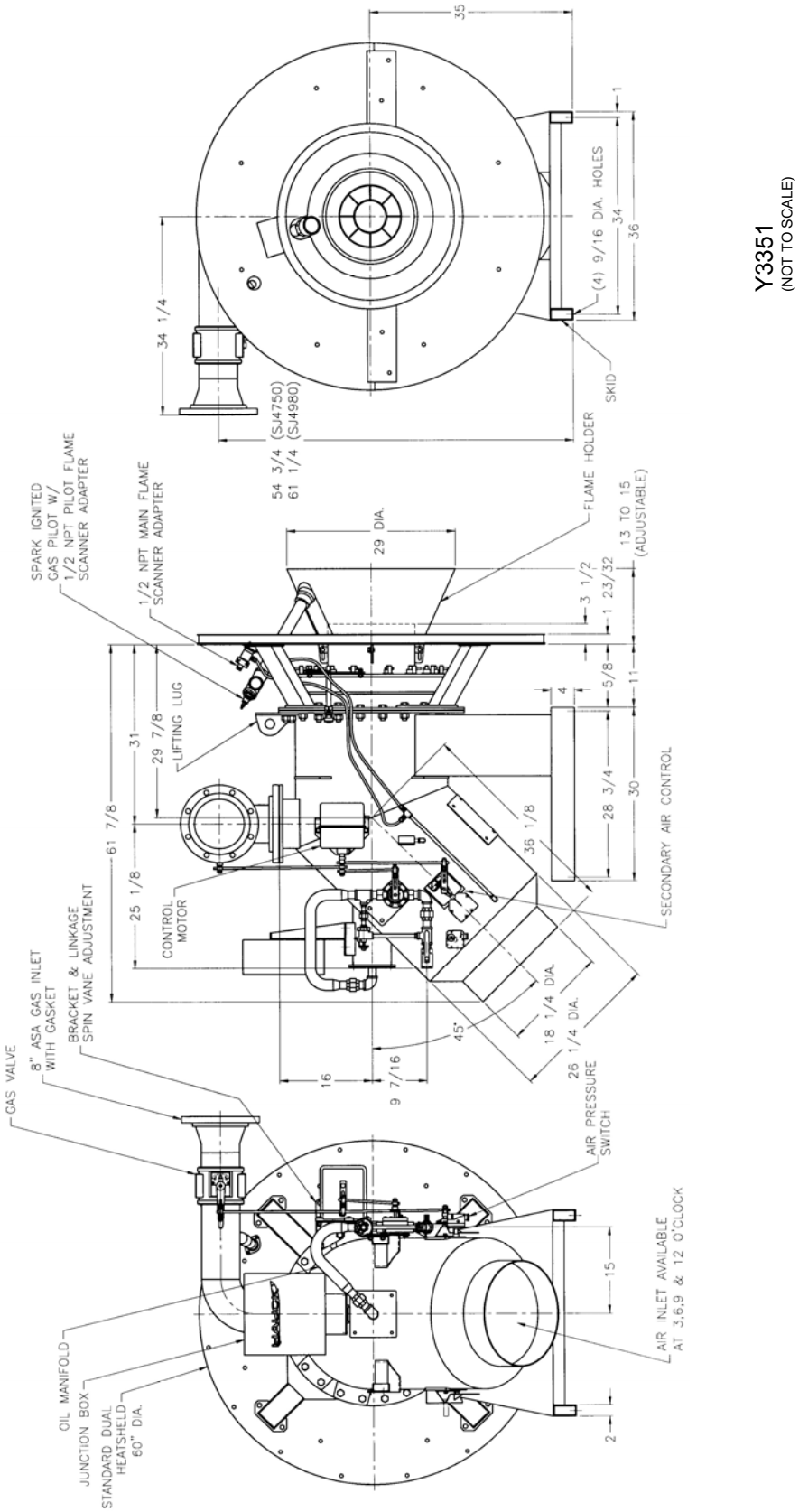

Figure 3. Dimensions SJ750 – SJ980

D. DIMENSIONS (Continued)

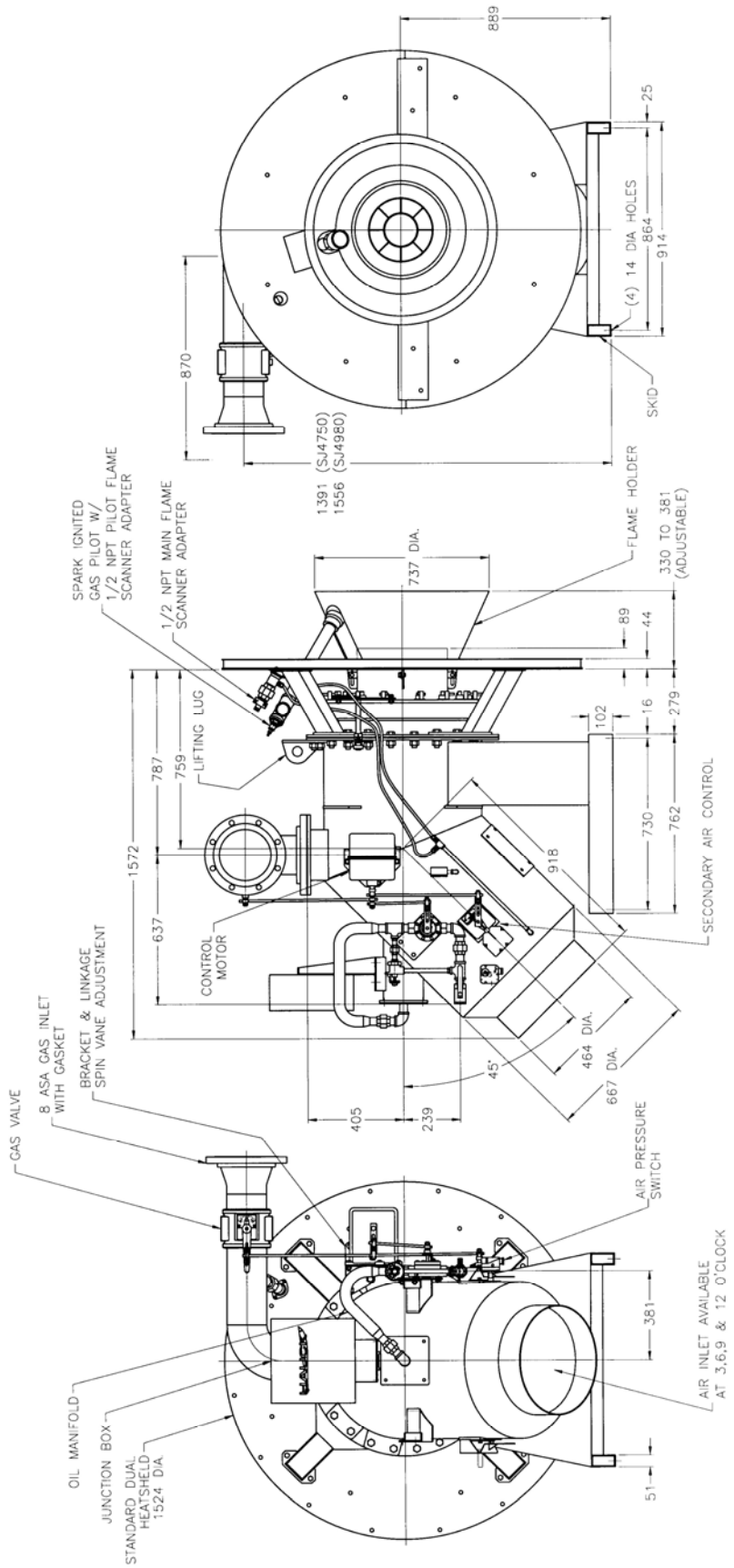

Y3351 METRIC
(NOT TO SCALE)

NOTE:
1. ALL DIMENSIONS ARE IN MM.

Figure 4. Metric Dimensions SJ750 – SJ980

E. COMPONENT IDENTIFICATION

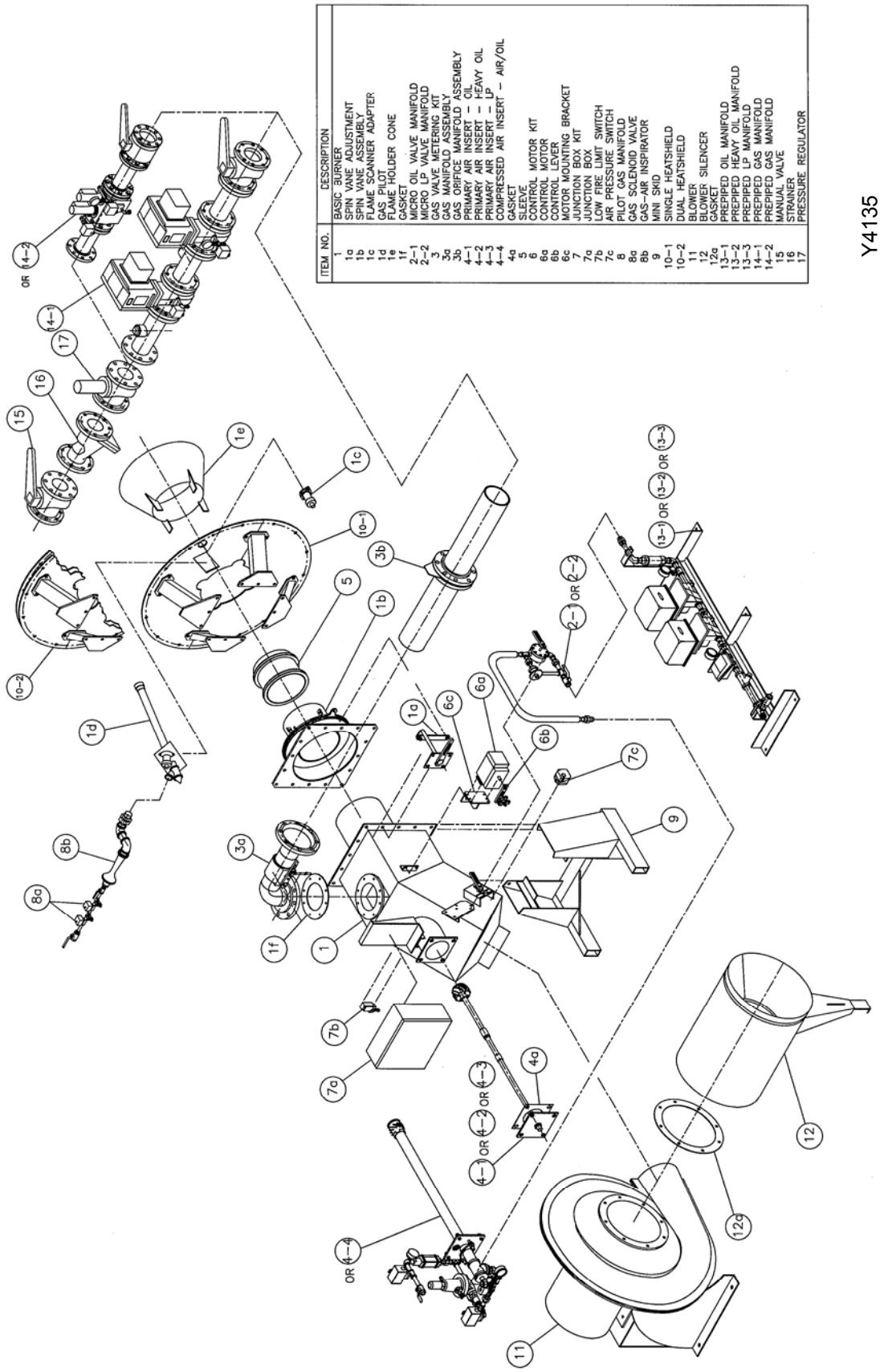

Figure 5. Hauck StarJet Burner and Associated System Components

F. BURNER MOUNTING

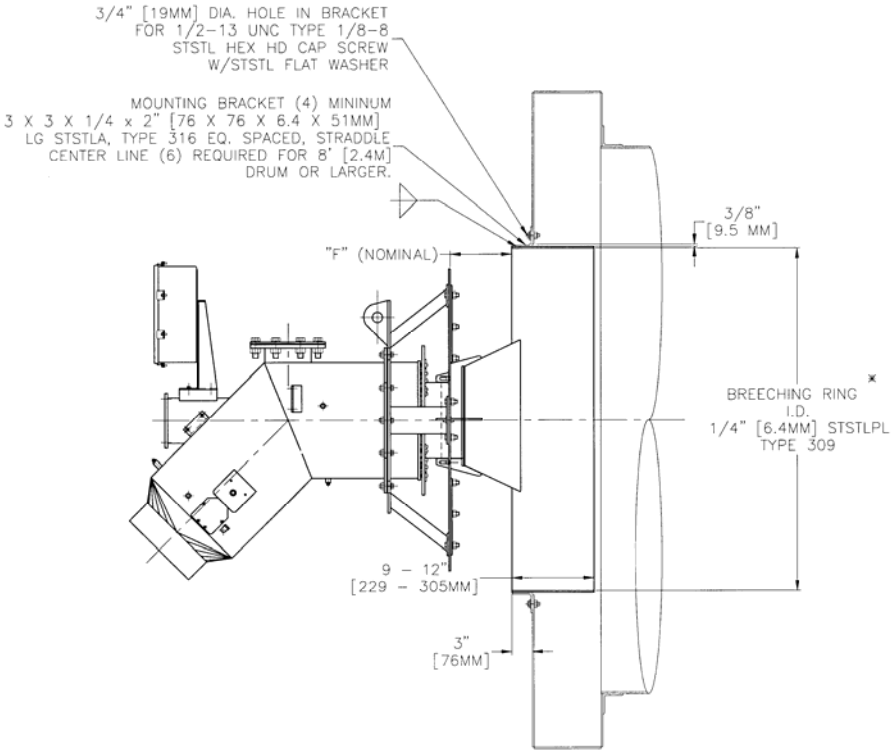

SJ MODEL NO.	BREECHING RING ID AT MAX CAPACITY	"F"
075	28" [711MM]	5" [127MM]
150	28" [711MM]	
200	30" [762MM]	9" [229MM]
260	33" [838MM]	
360	39" [991MM]	
520	43" [1090MM]	
580	50" [1270MM]	
750	57" [1450MM]	
980	64" [1630MM]	

NOTE:
1. * WELD BOTH SIDES OF BREECHING RING JOINT.
2. SEE APPLICATION SHEET GJ68.

X3916
(NOT TO SCALE)

Figure 6. Breeching Ring Detail

1. The burner should be mounted on the drum centerline at the same pitch as the drum. Install a structure to support and position the burner's skid. The skid support structure should provide a minimum adjustment of plus or minus 4" (102mm) along the centerline of the drum or breeching ring. Burner repositioning may be required for final burner adjustment.

2. Position the mini-skid on the support and securely bolt it in place.

3. Position the burner so that the distance between the heatshield and the breeching ring (or combustion chamber, if present) is either 5 or 9" (127 or 229mm), dependent on model size (see Figure 6).

> **IMPORTANT**
> The pilot flame UV scanner must be aligned to view just above the pilot as it passes through the flame holder cone. The main flame UV scanner should be sighted just over the edge of the flame holder cone, in line with the flame.

4. Optional Dual Heatshield - Install the two sections of the optional dual heatshield, if applicable, as shown in Figure 7.

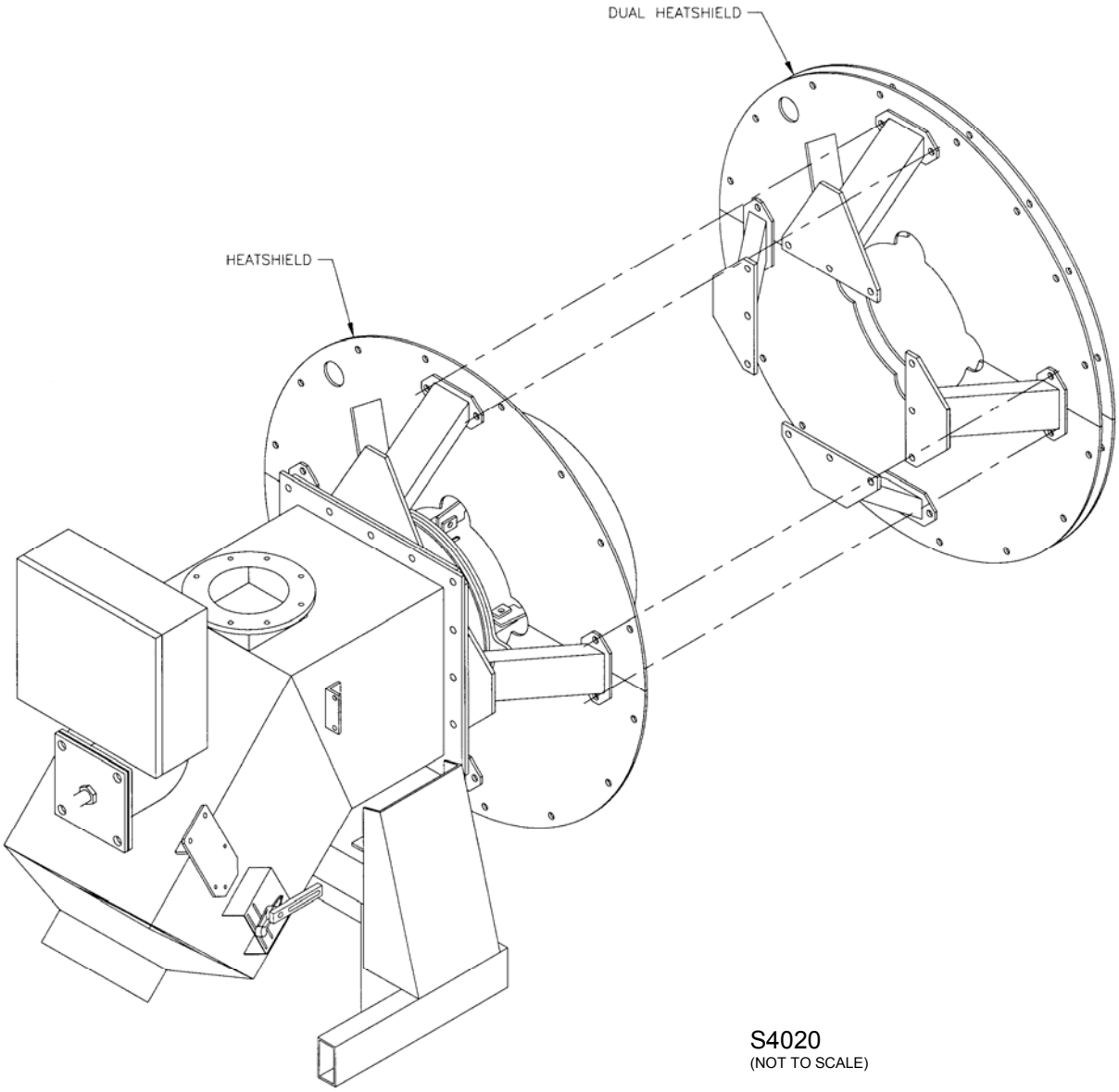

Figure 7. Installation of Dual Heatshield

5. Shim under the burner skid, if necessary, to align the burner horizontal and vertical centerlines with the horizontal and vertical centerlines of the dryer drum (or combustion chamber). **The assembled burner must be on the combustion chamber centerline and at the same pitch as the combustion chamber** (follow the dryer manufacturer's recommendation for burners used without combustion chambers).

G. FUEL MANIFOLD INSTALLATION

The StarJet burner system is supplied with a separate fuel valve manifold. Depending on fuel or fuels specified, the manifold(s) will be designated as POM - Prepiped Oil Manifold, PGM - Prepiped Gas Manifold, or PLPM - Prepiped Liquid Propane (LP) Manifold. Refer to dimension drawings supplied for component dimensions.

IMPORTANT

Valve manifolds must be mounted in a horizontal position. Valves will not function properly mounted vertically. Liquid fuel manifolds should not be mounted above the burner centerline. POM and PLPM manifold should be mounted as close to the burner as possible.

For all heavy fuel oil applications, i.e., any oil requiring heating for use, **oil piping must be heat traced** (electric or steam) **and insulated**. Self-regulating heat tracing is recommended to maintain the desired temperature of a given fuel oil to achieve 90 SSU (1.8×10^{-5} m^2/sec) or less at the burner. Electrical heat tracing with a nominal rating of 12 W/ft (39 W/m) covered with a nominal 2" (50mm) fiberglass type insulation is sufficient for most applications. **Fuel oil temperature should not exceed 250°F(120°C).** Oil viscosity should be checked prior to burner operation.

Hauck recommends the use of solid pipe to connect fuel manifolds to the burner fuel inlets. Schedule 40 iron pipe is recommended for gas and oil systems. **LP applications require the use of schedule 80 pipe and fittings rated for 350 psig (2410 kPa)**. Flexible hoses should not be used in LP applications to connect to the burner fuel inlet.

H. NATURAL GAS FUEL PIPING SYSTEM

WARNING

It is important to remove the high velocity oil sleeve and install the low velocity gas sleeve in the 075 – 750 model burners when firing natural gas.

NOTE

Hauck recommends the use of gas manifolds that meet NFPA guidelines. NFPA requires two safety shutoff valves wired in series, a shutoff valve downstream of the second (blocking) shutoff valve, and high and low gas pressure switches that are interlocked with the burner's safety shutoff valves. Hauck gas manifolds have been designed to ensure compliance to NFPA requirements.

1. Install a controlling gas regulator in the main gas line within 25 ft (7.6m) of the burner. For optimum control, supply 15-25 psig (103 – 172 kPa) to this regulator. This regulator should be sized to provide the required gas flow at the inlet of the burner manifold; 2 - 5 psig (14 - 35 kPa) is a nominal expected gas pressure. Exact gas pressures will be set at start-up.

2. A manual equipment isolation valve, sediment trap and gas strainer must be installed upstream of the gas control regulator to ensure compliance to NFPA requirements. The manual equipment isolation valve facilitates servicing of the gas control regulator, sediment trap, strainer, and sediment trap, strainer, and other components in the gas manifold.

3. The gas company should purge the main gas line to remove scale and dirt before it is attached to the burner gas manifold.

4. Connect the main gas line (see Figure 8).

IMPORTANT

Install a flexible fitting in the gas manifold to reduce flexing of the manifold resulting from plant vibrations. **Be sure to install the gas metering orifice section (see Figure 9) provided with the gas valve metering kit to measure gas flow. Excluding the gas metering orifice section will make initial setup and tuning difficult.**

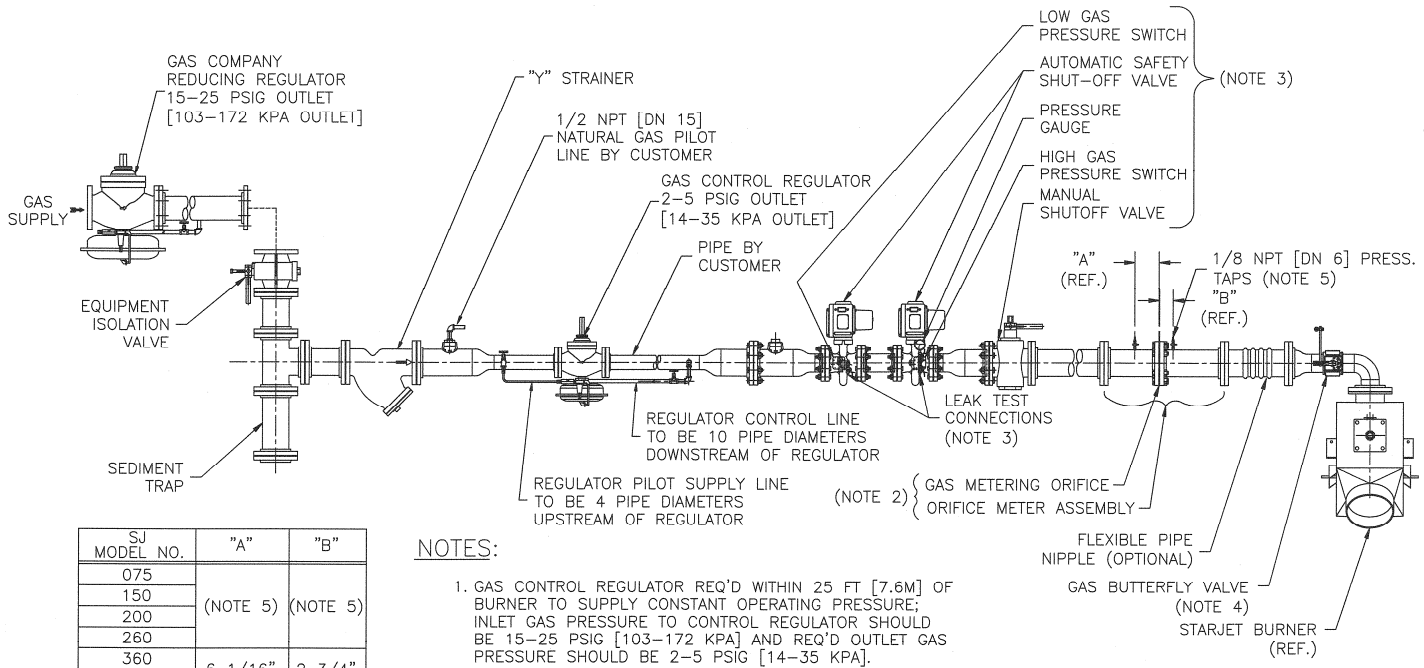

SJ MODEL NO.	"A"	"B"
075	(NOTE 5)	(NOTE 5)
150		
200		
260		
360	6 1/16" [154MM]	2 3/4" [70MM]
520		
580		
750	8 1/16" [205MM]	3 5/8" [92MM]
980		

NOTES:

1. GAS CONTROL REGULATOR REQ'D WITHIN 25 FT [7.6M] OF BURNER TO SUPPLY CONSTANT OPERATING PRESSURE; INLET GAS PRESSURE TO CONTROL REGULATOR SHOULD BE 15–25 PSIG [103–172 KPA] AND REQ'D OUTLET GAS PRESSURE SHOULD BE 2–5 PSIG [14–35 KPA].
2. ORIFICE METERING PLATE MUST MEET MINIMUM REQUIREMENTS OF FIGURE 9 (X4845), (PICTURED LOCATION IS RECOMMENDED).
3. PART OF PREPIPED GAS MANIFOLD.
4. PART OF GAS VALVE METERING KIT.
5. 075 THRU 260 PRESSURE TAPS ARE LOCATED ON ORIFICE FLANGES.

Y4220
(NOT TO SCALE)

Figure 8. Typical Schematic of Burner Gas Manifold

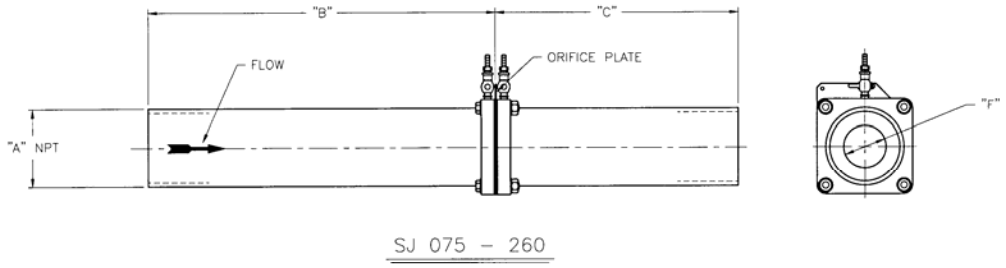

SJ MODEL NO.	"A"	"B"	"C"	"D"	"E"	"F" W/36 OSI [15.5KPA] BLOWER
075	2 1/2" [64MM]	12" [305MM]	8" [203MM]	–	–	1.941" [49.30MM]
150	4" [102MM]	20" [508MM]	14" [356MM]	–	–	3.004" [76.30MM]
200						3.154" [80.11MM]
260						
360	6" [152MM]	28" [711MM]	22" [559MM]	6 1/16" [154MM]	2 3/4" [70MM]	4.800" [121.9MM]
520						
580						
750	8" [203MM]	36" [914MM]	28" [711MM]	8 1/16" [205MM]	3 5/8" [92MM]	6.000" [152.4MM]
980						

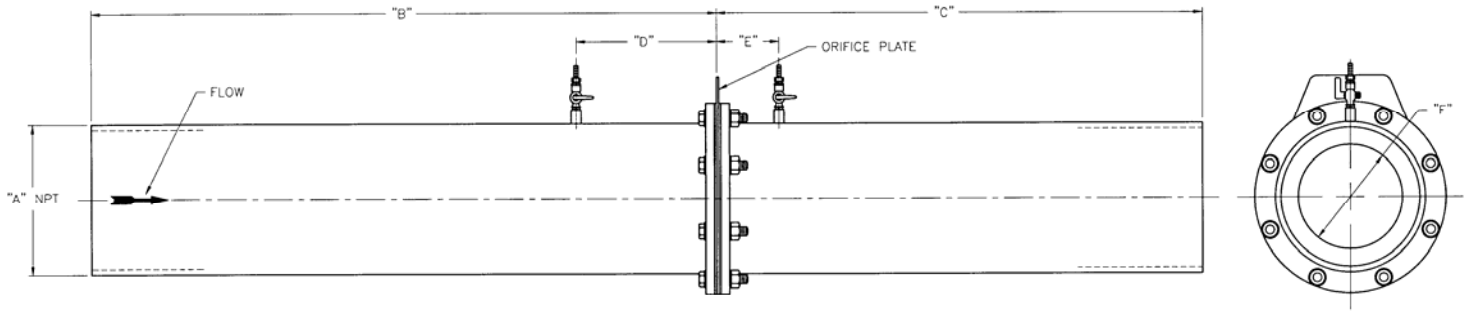

X4845
(NOT TO SCALE)

Figure 9. Dimensions for Gas Metering Orifice

5. The piping from the gas regulator outlet to the burner gas manifold should be sized to minimize pressure losses.

6. Check blower rotation. The impeller should rotate toward the blower discharge.

7. Inspect and operate the plant exhaust damper control. The exhaust damper should be capable of maintaining a consistent negative pressure at the drum front bulkhead of negative 0.2 to negative 0.5 "wc (negative 5 to negative 13mm wc) from low to high firing rates for most applications.

8. Install a gas sampling probe in the dryer rear plate (see Application Sheet GJ73).

9. Set the low gas pressure switch to an initial setting of 0.5 psig (3.4 kPa).

10. Set the high gas pressure switch to an initial setting of 5 psig (34.5 kPa).

11. Complete the initial adjustment of the gas butterfly valve as follows: The valve is factory set to travel 90 degrees from position 1 to position 'Run'. This travel can be modified to increase or decrease low fire by choosing a lower or higher starting point.

12. Open all manual shutoff valves in the gas line upstream of the gas pressure switch.

WARNING

Adjustment of this equipment and its components by unqualified personnel can result in fire, explosion, severe personal injury, or even death.

13. Start gas flow to the gas manifold.

14. Adjust the gas regulator until the pressure gauge upstream of the main gas automatic shutoff valves indicates a pressure of 2 psig (13.8 k Pa).

15. High fire can be modified by increasing or decreasing gas pressure. After setting high fire gas pressure, low fire must be rechecked. Refer to individual Burner Gas Orifice Meters Graph for gas flows through the gas orifice meter (see Figure 10).

16. Burner flame adjustment spin vanes can be set at 0 to 60 degrees; 0 degrees narrows the flame, 60 degrees widens the flame, and 30 degrees is a nominal starting point.

17. Burner air adjustments: (see Section P).

18. Recheck all linkages for tightness.

19. Install a U-tube manometer across the gas orifice meter taps.

20. Connect a gas analyzer to the gas sampling probe.

21. Exhaust gas readings should be taken with the burner firing at operating tonnage (see Application Sheet GJ73).

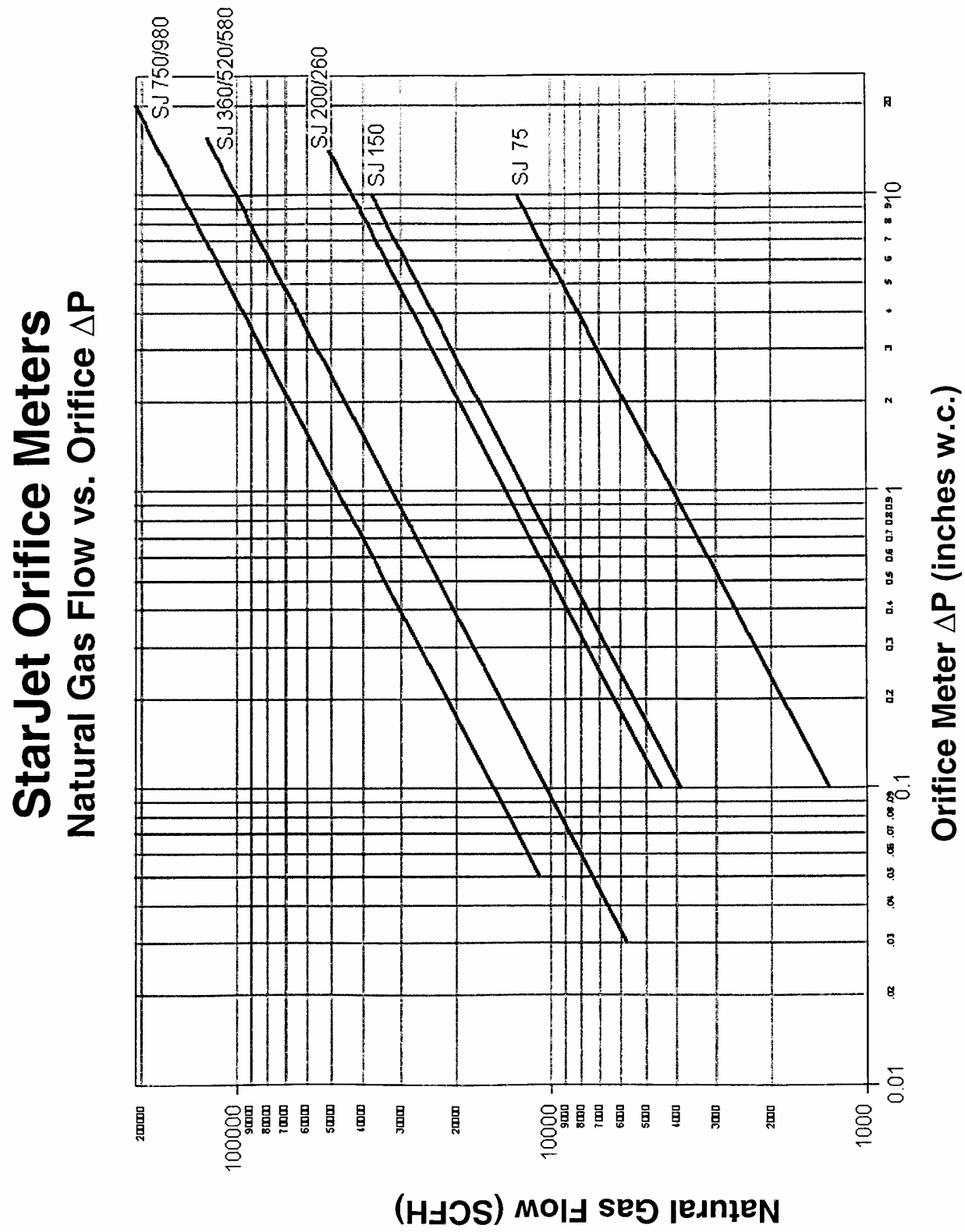

1. StarJet orifice meter curve for natural gas (0.6 s.g., 3 psig upstream pressure).
2. See burner performance tables for orifice plate and pipe dimensions.

Figure 10. Gas Orifice Meters Graph

I. LIGHT FUEL OIL PIPING SYSTEM

WARNING

Adjustment of this equipment and its components by unqualified personnel can result in fire, explosion, severe personal injury, or even death.

NOTE

Hauck requires the use of oil manifolds that meet NFPA guidelines. NFPA requires two safety shutoff valves piped in series in the burner's main oil line. A low/high oil pressure switch must be interlocked with the burner's safety shutoff valves.

1. Light fuel oil supply manifold (see Figure 11 and 12): For recommended piping sizes, see Table 3. For POM oil manifold installation instructions, see Section G.

	Discharge Piping, Light Oil Up to 100 SSU (Up to 2.1 x 10^{-5} m^2/sec)			Return Piping, Light Oil Up to 100 SSU (Up to 2.1 x 10^{-5} m^2/sec)			Return Piping Heavy Oil		
StarJet Burner	To 25 ft (To 7.6m)	25-49 ft (7.6-14.9m)	50-100 ft (15.2-30.5m)	To 25 ft (To 7.6m)	25-49 ft (7.6-14.9m)	50-100 ft (15.2-30.5m)	To 25 ft (To 7.6m)	25-49 ft (7.6-14.9m)	50-100 ft (15.2-30.5m)
075	3/4" (DN 20)	3/4" (DN 20)	3/4" (DN 20)	3/4" (DN 20)	3/4" (DN 20)	1" (DN 25)	1" (DN 25)	1-1/4" (DN 32)	1-1/4" (DN 32)
150	3/4" (DN 20)	3/4" (DN 20)	3/4" (DN 20)	3/4" (DN 20)	3/4" (DN 20)	1" (DN 25)	1" (DN 25)	1-1/4" (DN 32)	1-1/4" (DN 32)
200	1" (DN 25)	1" (DN 25)	1-1/4" (DN 32)	1" (DN 25)	1-1/4" (DN 32)	1-1/4" (DN 32)	1-1/4" (DN 32)	1-1/2" (DN 40)	2" (DN 50)
260	1" (DN 25)	1" (DN 25)	1-1/4" (DN 32)	1" (DN 25)	1-1/4" (DN 32)	1-1/4" (DN 32)	1-1/4" (DN 32)	1-1/2" (DN 40)	2" (DN 50)
360	1" (DN 25)	1" (DN 25)	1-1/4" (DN 32)	1" (DN 25)	1-1/4" (DN 32)	1-1/4" (DN 32)	1-1/4" (DN 32)	1-1/2" (DN 40)	2" (DN 50)
520	1" (DN 25)	1" (DN 25)	1-1/4" (DN 32)	1-1/4" (DN 32)	1-1/4" (DN 32)	1-1/4" (DN 32)	1-1/4" (DN 32)	1-1/2" (DN 40)	2" (DN 50)
580	1" (DN 25)	1-1/4" (DN 32)	1-1/2" (DN 40)	1-1/4" (DN 32)	1-1/4" (DN 32)	1-1/2" (DN 40)	1-1/2" (DN 40)	2" (DN 50)	2" (DN 50)
750	1-1/2" (DN 40)	1-1/2" (DN 40)	1-1/2" (DN 40)	1-1/4" (DN 32)	1-1/2" (DN 40)	1-1/2" (DN 40)	1-1/2" (DN 40)	2" (DN 50)	2-1/2" (DN 65)
980	1-1/2" (DN 40)	1-1/2" (DN 40)	1-1/2" (DN 40)	1-1/2" (DN 40)	1-1/2" (DN 40)	1-1/2" (DN 40)	2" (DN 50)	2-1/2" (DN 65)	2-1/2" (DN 65)

Table 3. Minimum Pipe Size for Hauck Oil Supply Pumping Units

2. Before attaching fuel oil lines, purge the piping to remove scale and dirt that could clog and damage oil equipment.

3. Open all shutoff valves upstream of the fuel oil metering valve(s).

4. Be sure that the metering valve(s) is in the low fire position.

5. Open the mini-ball valve to the pressure gauge.

6. Slowly adjust the bypass relief valve until the initial set-up fuel oil pressure is achieved (see Table 4). Final pump pressure will have to be adjusted to attain desired burner output and stack exhaust gas analysis.

StarJet Model No.	Fuel Oil Pressure w/36 osig (15.5 kPa) Blower
075	45 psig (310 kPa)
150	50 psig (345 kPa)
200	45 psig (310 kPa)
260	50 psig (345 kPa)
360	50 psig (345 kPa)
520	50 psig (345 kPa)
580	80 psig (550 kPa)
750	70 psig (485 kPa)
980	80 psig (550 kPa)

Table 4. Fuel Oil Pressures

7. Check rotation of the combustion blower. The impeller should rotate toward the blower discharge.

8. Inspect and operate the plant exhaust damper control. The exhaust damper should be capable of maintaining a consistent negative pressure at the drum front bulkhead of negative 0.2 to negative 0.5 "wc (negative 5 to negative 13mm wc) from low to high firing rates for most applications.

9. The low/high oil pressure switch is factory set at a low set point of 15 psig (103 kPa) and a high set point of 80 psig (552 kPa). Set point adjustments may be required depending on the burner and fuel oil piping specifics.

10. Inspect the complete fuel oil system for leaks. Repair as necessary.

11. The burner oil metering valve is factory set to travel 90 degrees from position 1 to 10.

12. The low fire oil valve is manually set and regulates low fire flow. This valve can easily be changed to regulate low fire oil flow. Start this valve at position 9. The low fire valve can easily be cleaned:

    a. Mark the valve pointer position.
    b. Turn the valve counterclockwise to the ’clean’ position.
    c. Return the valve pointer to its original position.

13. High fire oil flow can be adjusted by increasing or decreasing fuel oil pressure. After changing fuel oil pressure, low fire flow should be rechecked. Low and high fire rates in gal/min or liters/min can be checked and recorded with the in-line oil flow meter provided with the prepiped oil manifold.

14. Burner flame spin vane adjustment can be set at 0 to 60 degrees. 0 degrees narrows the flame, 60 degrees widens the flame, and 30 degrees is a nominal starting point.

15. Burner air adjustments: (see Section P).

16. Recheck all linkages for tightness.

17. Connect a gas analyzer to the gas sampling probe (see Application Sheet GJ73). Exhaust gas readings should be taken at operating tonnage.

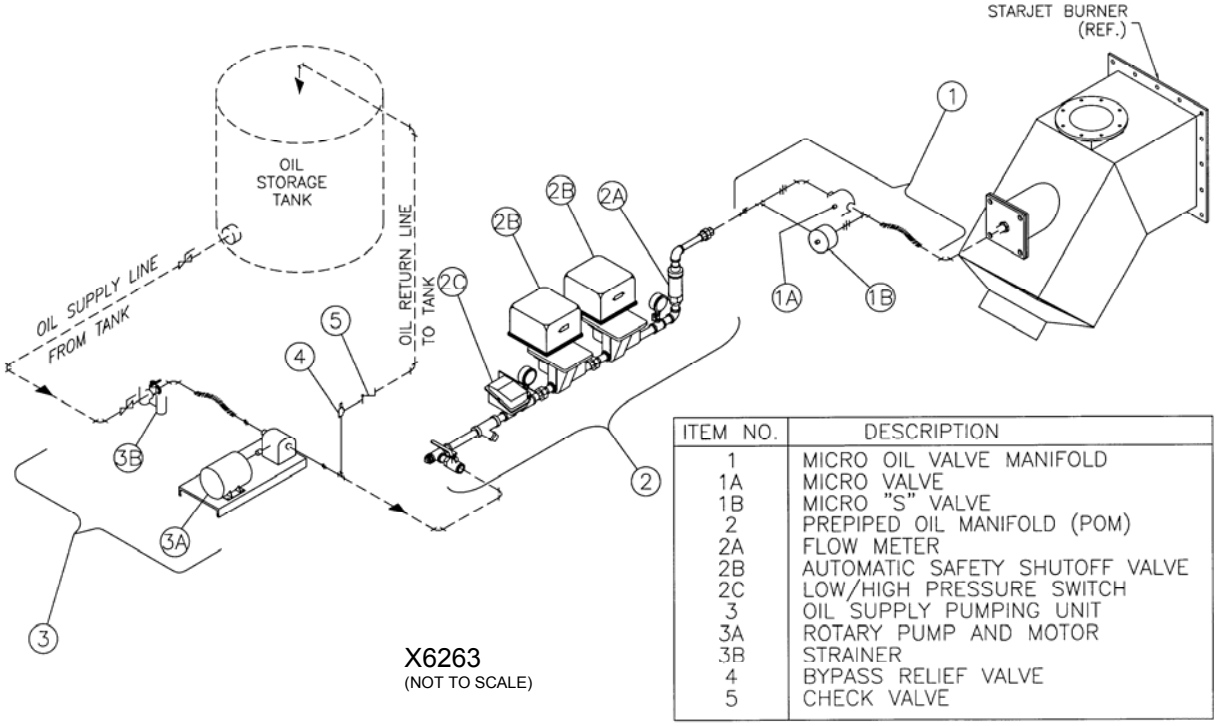

ITEM NO.	DESCRIPTION
1	MICRO OIL VALVE MANIFOLD
1A	MICRO VALVE
1B	MICRO "S" VALVE
2	PREPIPED OIL MANIFOLD (POM)
2A	FLOW METER
2B	AUTOMATIC SAFETY SHUTOFF VALVE
2C	LOW/HIGH PRESSURE SWITCH
3	OIL SUPPLY PUMPING UNIT
3A	ROTARY PUMP AND MOTOR
3B	STRAINER
4	BYPASS RELIEF VALVE
5	CHECK VALVE

Figure 11. Typical Schematic of Burner Light Fuel Oil Piping

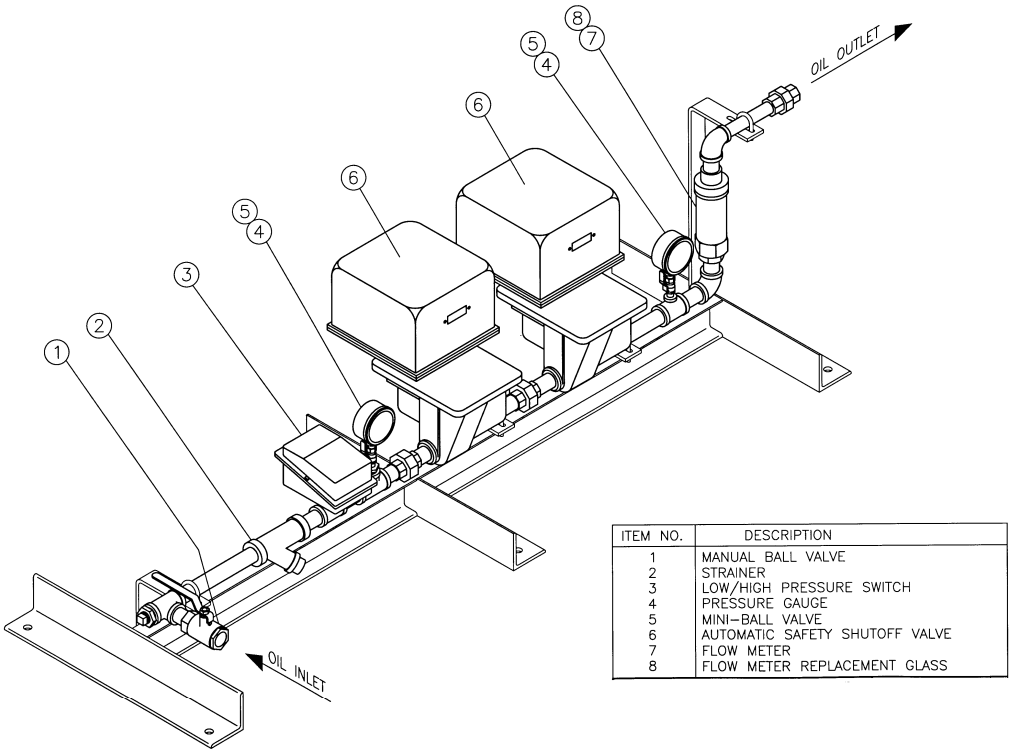

ITEM NO.	DESCRIPTION
1	MANUAL BALL VALVE
2	STRAINER
3	LOW/HIGH PRESSURE SWITCH
4	PRESSURE GAUGE
5	MINI-BALL VALVE
6	AUTOMATIC SAFETY SHUTOFF VALVE
7	FLOW METER
8	FLOW METER REPLACEMENT GLASS

X6189
(NOT TO SCALE)

NOTE
Oil manifold must be mounted in a horizontal position. Mount as close to the burner as possible. Mount manifold below the burner's center-line.

Figure 12. POM Prepiped Oil Manifold Detail

J. HEAVY FUEL OIL PIPING SYSTEM

WARNING

Adjustment of this equipment and its components by unqualified personnel can result in fire, explosion, severe personal injury, or even death.

Heated fuel oil and piping is hot. Precautions must be taken to prevent contact with heated oil and piping. Proper insulation should be installed on hot oil pipes. Protective gloves and clothing are recommended when working with heated fuel oil.

IMPORTANT

For all heavy fuel oil applications, i.e., any oil requiring heating for use, **oil piping must be heat traced** (electric or steam) **and insulated**. Self-regulating heat tracing is recommended to maintain the desired temperature of a given fuel oil to achieve 90 SSU (1.8×10^{-5} m^2/sec) or less at the burner. Electrical heat tracing with a nominal rating of 12W/ft (39W/m) covered with a nominal 2" (50mm) fiberglass type insulation is sufficient for most applications.

NOTE

Hauck recommends the use of oil manifolds that meet NFPA guidelines. NFPA requires two safety shutoff valves piped in series in the burner's main oil line. A low/high oil pressure switch must be interlocked with the burner's safety shutoff valves. When preheated oil is used, a low/high oil temperature limit switch must be interlocked to the burner's oil safety shutoff valves. Hauck's oil manifolds have been designed to ensure compliance to NFPA requirements.

1. Heavy fuel oil supply piping and manifold (see Figure 13 and 14): For recommended piping sizes, see Table 4. For POM-H oil manifold installation instructions, see Section G.

2. **Fuel oil used must be 90 SSU (1.8 x 10^{-5} m^2/sec) or less for proper atomization and burning.** Use a Hauck viscometer kit (order separately – Part No. 36931) to determine the proper oil temperature for 90 SSU.

3. Set the fuel oil heater temperature set point and the indicating low oil temperature switch (located on the burner's oil manifold) to the temperature determined from Step 2.

4. Before attaching fuel oil lines, purge the piping to remove scale and dirt that could clog and damage oil equipment.

5. Open all shutoff valves upstream of the fuel oil metering valve(s).

6. Open the mini-ball valve to the pressure gauge.

7. Start the pump and heating medium.

8. Close the manual ball valve immediately downstream of the normally open solenoid in the heavy oil recirculating line.

9. Adjust the bypass relief valve on the pump set until the initial set-up oil pressure is achieved (see Table 4). Final pump pressure will have to be adjusted to attain desired burner output and stack exhaust gas analysis.

10. Open the manual ball valve in the heavy oil recirculating line.

11. Using the low/high oil temperature indicating switch located on the burner, verify that the fuel oil is at the desired temperature from Step 2. Adjust the heater until the proper fuel oil temperature is attained at the burner.

12. Check and repair all fuel oil leaks.

13. The burner oil metering valve is factory set to travel 90 degrees from position 1 to 10.

14. The low fire oil valve is manually set and regulates low fire flow. This valve can easily be changed to regulate low fire. Start this valve at position 9. The low fire valve can easily be cleaned:

    a. Mark the valve pointer position.
    b. Turn the valve counterclockwise to the 'clean' position.
    c. Return the valve pointer to its original position.

15. High fire can be modified by increasing or decreasing fuel oil pressure or by changing the maximum oil metering valve stroke. After changing fuel oil pressure, low fire should be rechecked.

16. Check rotation of the combustion blower. The impeller should rotate toward the blower discharge.

17. Inspect and operate the plant exhaust damper control. The exhaust damper should be capable of maintaining a consistent negative pressure at the drum front bulkhead of negative 0.2 to negative 0.5 "wc (negative 5 to negative 13mm wc) from low to high firing rates for most applications.

18. The low/high oil pressure switch is factory set at a low set point of 15 psig (103 kPa) and a high set point of 80 psig (552 kPa). Set point adjustments may be required depending on the burner and fuel oil piping specifics.

19. Burner flame spin vanes adjustment can be set at 0 to 60 degrees; 0 degrees narrows the flame, 60 degrees widens the flame, and 30 degrees is a nominal starting point.

20. Burner air adjustments: (see Section P).

21. Recheck all linkages for tightness.

22. Install a gas sampling probe in the dryer drum rear (see Application Sheet GJ73).

23. Connect a gas analyzer to the gas sampling probe (see Application Sheet GJ73). Exhaust gas readings should be taken at operating tonnage.

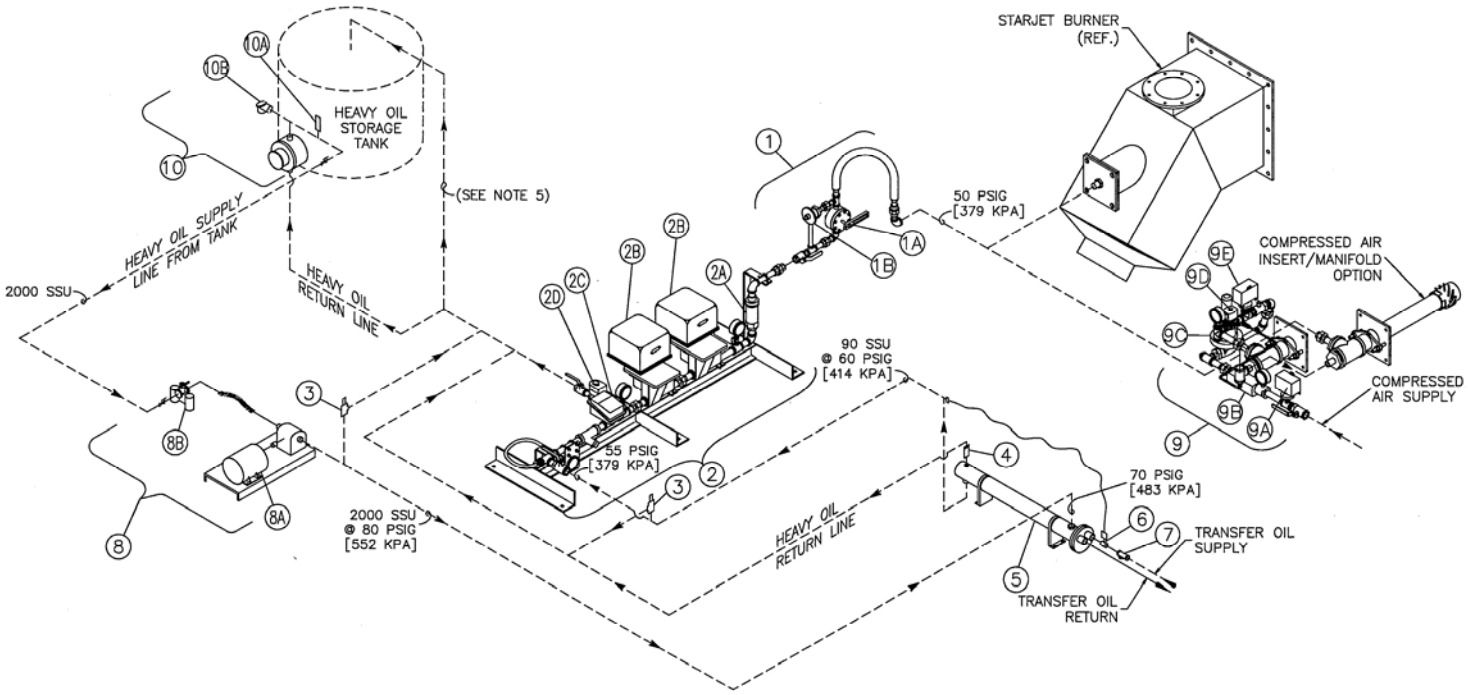

NOTES:

1. PIPING SCHEMATIC SHOWS TYPICAL COMPONENTS AND NOMINAL VISCOSITIES AND PRESSURES FOR HEAVY FUEL OIL SUPPLY; ACTUAL REQUIREMENTS ARE DEPENDENT UPON THE SPECIFIC BURNER SYSTEM (CONSULT HAUCK).
2. OIL RETURN LINES TO BE SIZED ACCORDING TO DISTANCE TO PUMP – MINIMUM SIZE EQUAL TO TWO PIPE SIZES LARGER THAN OIL SUPPLY LINE (SEE GL88 FOR MINIMUM LINE SIZES FOR HAUCK OIL SUPPLY PUMPING UNITS).
3. FOR ALL HEAVY OIL APPLICATIONS, HEAVY OIL PIPING MUST BE HEAT TRACED (ELECTRIC OR STEAM) AND INSULATED. SELF–REGULATING HEAT TRACING IS RECOMMENDED TO MAINTAIN THE DESIRED TEMPERATURE OF A GIVEN FUEL OIL TO ACHIEVE 90 SSU ($1.8 \times 10^{-5} M^2/SEC$) OR LESS AT THE BURNER. ELECTRICAL HEAT TRACING WITH A NOMINAL RATING OF 12 W/FT (39W/M) COVERED WITH A NOMINAL 2" (50MM) FIBERGLASS TYPE INSULATION IS SUFFICIENT FOR MOST APPLICATIONS.
4. IF USING NO. 6 FUEL OIL AND THE PIPING BETWEEN THE SUPPLY PUMPING UNIT (ITEM 8) AND THE PREPIPED OIL MANIFOLD (ITEM 2) IS GREATER THAN 50FT (15M), AN ADDITIONAL BYPASS RELIEF VALVE (ITEM 3) MAY BE REQUIRED IN THE SUPPLY PIPING TO ACCOMMODATE COLD SYSTEM STARTUP (CONSULT HAUCK).
5. IF SUCTION HEATER IS NOT UTILIZED, OIL RETURN LINE SHOULD BE PIPED TO THE OIL STORAGE TANK.

ITEM NO.	DESCRIPTION
1	MICRO OIL VALVE MANIFOLD
1A	MICRO VALVE
1B	MICRO "S" VALVE
2	PREPIPED HEAVY OIL MANIFOLD
2A	FLOW METER
2B	AUTOMATIC SAFETY SHUTOFF VALVE
2C	LOW/HIGH PRESSURE SWITCH
2D	RETURN OIL SOLENOID VALVE
3	BYPASS RELIEF VALVE
4	OVER PRESSURE RELIEF VALVE
5	OIL LINE HEATER
6	TEMPERATURE REGULATING VALVE W/ ELEMENT & CAPILLARY TUBE
7	STRAINER
8	OIL SUPPLY PUMPING UNIT
8A	ROTARY PUMP AND MOTOR
8B	STRAINER
9	COMPRESSED AIR MANIFOLD
9A	LOW PRESSURE SUPPLY SWITCH
9B	FLOW METER
9C	PRESSURE REDUCING REGULATOR
9D	AIR SOLENOID
9E	LOW ATOMIZING PRESSURE SWITCH
10	ELECTRIC SUCTION HEATER
10A	OIL FLOW SWITCH
10B	OIL TEMPERATURE CONTROL THERMOCOUPLE

Y7513
(NOT TO SCALE)

Figure 13. Typical Schematic of Burner Heavy Fuel Oil Piping

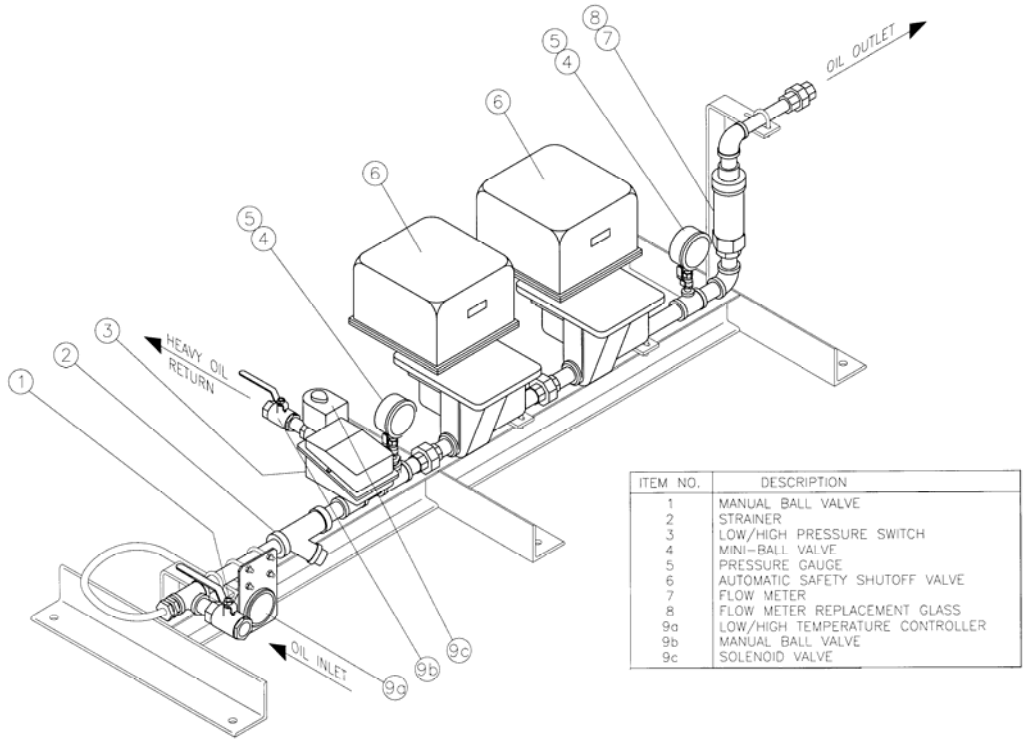

ITEM NO.	DESCRIPTION
1	MANUAL BALL VALVE
2	STRAINER
3	LOW/HIGH PRESSURE SWITCH
4	MINI-BALL VALVE
5	PRESSURE GAUGE
6	AUTOMATIC SAFETY SHUTOFF VALVE
7	FLOW METER
8	FLOW METER REPLACEMENT GLASS
9a	LOW/HIGH TEMPERATURE CONTROLLER
9b	MANUAL BALL VALVE
9c	SOLENOID VALVE

NOTE
Oil manifold must be mounted in a horizontal position. Mount as close to the burner as possible. Mount manifold below the burner's center-line.

X6210
(NOT TO SCALE)

Figure 14. POM-H Prepiped Heavy Oil Manifold Detail

K. HEAVY OIL INSERT HEATER

Heavy, waste, or recycled fuel oils require some means of viscosity control. The Hauck Heavy Oil Insert Heater installed in the burner nozzle supply line is a perfect solution to the viscosity control problem and reliable main flame ignition of the burner at cold temperatures. The heavy oil insert heating element, in conjunction with the oil temperature indicating controller, will maintain an optimum oil temperature in the oil tube to ensure a reliable burner main flame ignition after an extended shutdown of the burner.

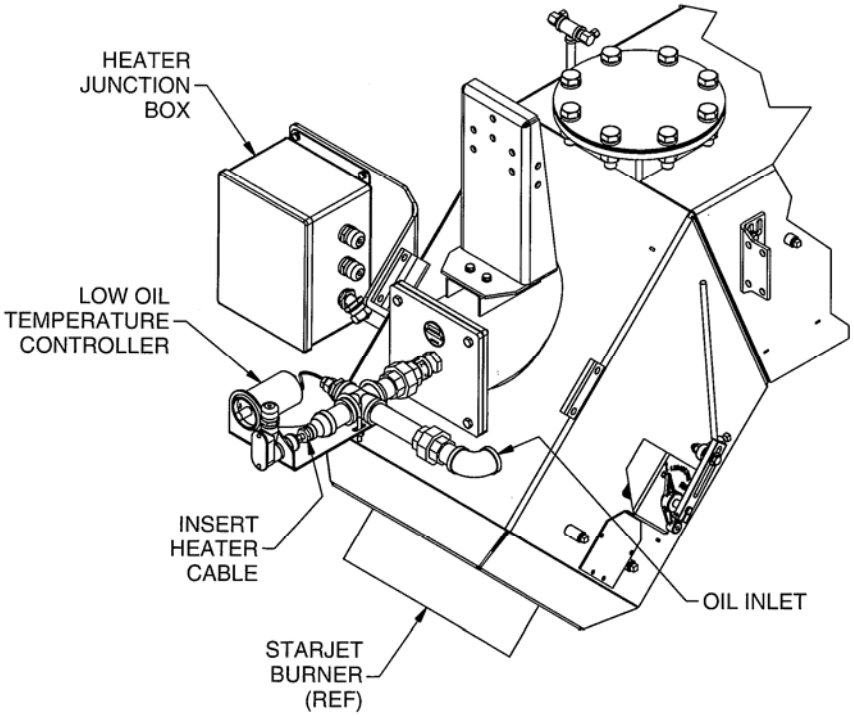

W7655
(NOT TO SCALE)

Figure 15. Heavy Oil Insert Heater

NOTE
120V/60Hz power for the heavy oil insert heater must be supplied separately by the customer and wired into the heater junction box.

Operation of the heavy oil insert kit is as follows (see Figure 15):

1. Adjust the low temperature controller to the desired temperature as determined in Section K from testing of the heavy oil viscosity.

NOTE
Adjusting the trip setpoint above the required temperature, as determined by fuel oil viscosity testing, may result in coking of the fuel oil in the insert oil piping.

2. Energize the insert heater circuit breaker switch.
3. When the oil temperature exceeds the setpoint on the oil temperature indicating controller, the oil temperature indicating controller switch contact will open and power to the heater element is removed.
4. When the oil temperature drops below the setpoint on the oil temperature indicating controller, the oil temperature indicating controller switch contact will close and the heater element will energize.

See SJ-9.2 StarJet Heavy Oil Insert Heater Kit Instructions for more specific detail on the operation and maintenance of the heavy oil insert heater.

L. FUEL OIL NOZZLE ADJUSTMENT

The position of the fuel oil nozzle affects its ability to atomize the oil. The low pressure nozzle or compressed air nozzle should be positioned as shown in Figure 16.

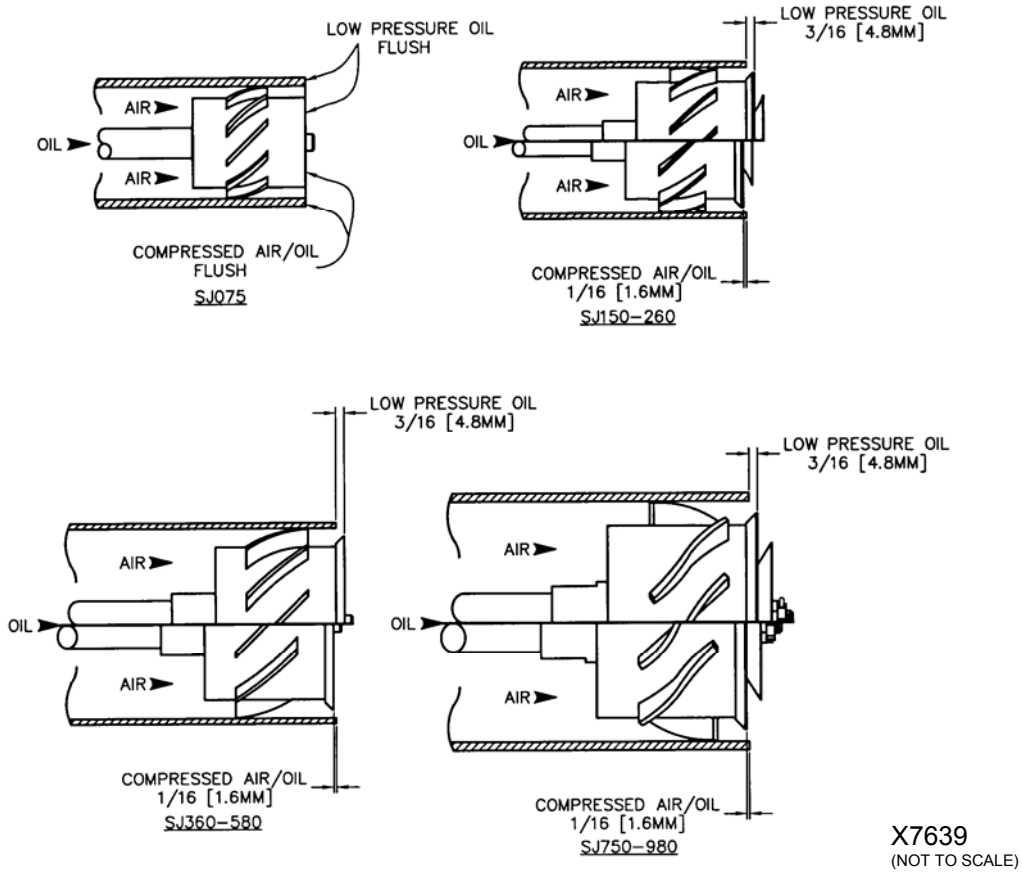

Figure 16. Oil Nozzle Position

To change the fuel oil nozzle position:

1. Shut the oil valve upstream of the safety shutoff valves.

2. Disconnect the burner oil insert assembly from the oil valve manifold, using the union located downstream of the flexible hose.

3. Note the present orientation of the nozzle while assembled in the burner. Determine if the nozzle must be retracted into or extended out of the primary air tube (see Figure 16).

4. Remove the four bolts securing the backplate to the burner.

5. Loosen the jam nut on the backplate of the burner oil insert assembly.

6. Rotate the backplate to effect the required retraction or extension of the nozzle. One full rotation of the backplate will move the nozzle approximately 0.1" (2.5mm).

7. Once the proper positioning of the nozzle is completed:

   a. Tighten the jam nut.
   b. Attach the burner oil insert assembly to the oil valve manifold, using the union provided.
   c. Open the oil valve upstream of the safety shutoff valves.

M. COMPRESSED AIR/OIL SYSTEM

The Hauck high pressure oil nozzle is designed to finely atomize No. 2 fuel oil and clean preheated No. 4, No. 5 and No. 6 fuel oil. Oil viscosity should be 90 SSU (1.8×10^{-5} m^2/sec) or less. Preheat fuel oil and heat trace piping when using No. 4, No. 5, and No. 6 fuel oil to achieve 90 SSU oil at the burner (see Compressed Air/Oil Adjustment).

Care should be taken to insure that the air and oil supplied to the burner are free of dirt particles and water. Purge oil and air lines before connecting them to the compressed air/oil insert. The nozzle should be inspected and cleaned before the start of each session and possibly more depending on the cleanliness of the air and fuel.

COMPRESSED AIR PIPING

1. The compressed air supply line must be of adequate size (see Table 5) and be a dedicated line from the compressor to the burner compressed air inlet. For longer piping runs than those listed in the table, increase the hose by one pipe size. Before attaching lines, purge the hose to remove any dirt that could clog and damage the oil nozzle.

StarJet Model No.	Min. Hose Size	Max. Hose Length
150 - 260	3/4 NPT (DN 20)	70 ft (21 m)
360 - 580	1 NPT (DN 25)	160 ft (49 m)
750 - 980	1 NPT (DN 25)	90 ft (27 m)

Table 5. Flexible Air Hose Size Requirements

2. Compressed air requirements are listed in Table 6. Compressed air must be supplied to the inlet of the compressed air manifold at a minimum of 90 psig (620 kPa). The compressed air regulator modulates the compressed air flow as oil flow is modulated to reduce compressed air consumption at lower firing rates.

NOTE

The compressed air low supply pressure switch and low atomizing pressure switch must both be interlocked with the burner's oil safety shutoff valves.

The compressed air solenoid valve is normally wired in parallel with the burner's safety shutoff valves.

Reference the control panel drawings for wire and/or terminal numbers.

StarJet Model No.	Firing Rate	Oil Flow		Oil Pressure To Burner Nozzle		Compressed Air Flow		Compressed Air Pressure to Burner Nozzle	
		(gpm)	(lpm)	(psig)	(kPa)	(scfm)	(nm^3/min)	(psig)	(kPa)
150	High Fire	3.4	12.9	32	220	45	1.2	33	228
	50%	1.7	6.4	14	97	40	1.1	16	110
	25%	0.84	3.2	8	55	40	1.1	10	69
	Low Fire	0.5	1.9	6	41	35	0.9	8	55
200	High Fire	4.9	18.5	45	310	45	1.2	45	310
	50%	2.4	9.1	32	221	45	1.2	32	221
	25%	1.2	4.5	12	83	40	1.1	12	83
	Low Fire	0.7	2.6	7	48	40	1.1	8	55
260	High Fire	5.9	22.3	45	310	45	1.2	45	310
	50%	3.0	11.4	32	221	45	1.2	32	221
	25%	1.5	5.8	12	83	40	1.1	12	83
	Low Fire	0.85	3.2	7	48	40	1.1	8	55
360	High Fire	9.1	34.4	60	414	65	1.7	58	400
	50%	4.6	17.4	48	331	65	1.7	44	304
	25%	2.3	8.7	36	248	60	1.6	30	207
	Low Fire	1.5	5.7	30	207	55	1.5	20	138
520	High Fire	11.7	44.3	60	414	65	1.7	58	400
	50%	5.8	22.0	50	345	65	1.7	44	304
	25%	2.9	11.0	38	262	60	1.6	30	207
	Low Fire	1.5	5.7	30	207	55	1.5	20	138
580	High Fire	14.5	54.9	52	359	90	2.4	43	296
	50%	7.2	27.3	30	207	83	2.2	25	172
	25%	3.6	13.6	22	152	81	2.2	20	138
	Low Fire	2.0	7.7	21	145	79	2.1	19	131
750	High Fire	18.1	68.5	54	372	115	3.1	40	276
	50%	9.1	34.4	34	234	110	2.9	25	172
	25%	4.5	17.0	28	193	100	2.7	20	138
	Low Fire	2.0	7.6	20	138	100	2.7	12	83
980	High Fire	24	90.8	66	455	118	3.2	48	331
	50%	12	45.4	40	276	112	3.0	30	207
	25%	6.5	24.6	30	207	106	2.8	22	152
	Low Fire	3.0	11.4	22	152	100	2.7	14	97

Table 6. Compressed Air and Oil Requirements

COMPRESSED AIR/OIL ADJUSTMENT

1. Air and fuel flows and pressures can be observed at the burner using the compressed air and fuel flow meters and corresponding pressure gauges (see Figure 17).

2. Compressed air supply pressure to the inlet of the compressed air manifold must be 90 psig (620 kPa) or greater. The supply pressure is measured via the gauge on the inlet to the compressed air flow meter (see Figure 17). The compressed air low supply pressure switch is preset at 60 psig (414 kPa). Set point adjustment may be required depending on the burner and compressed air piping specifics.

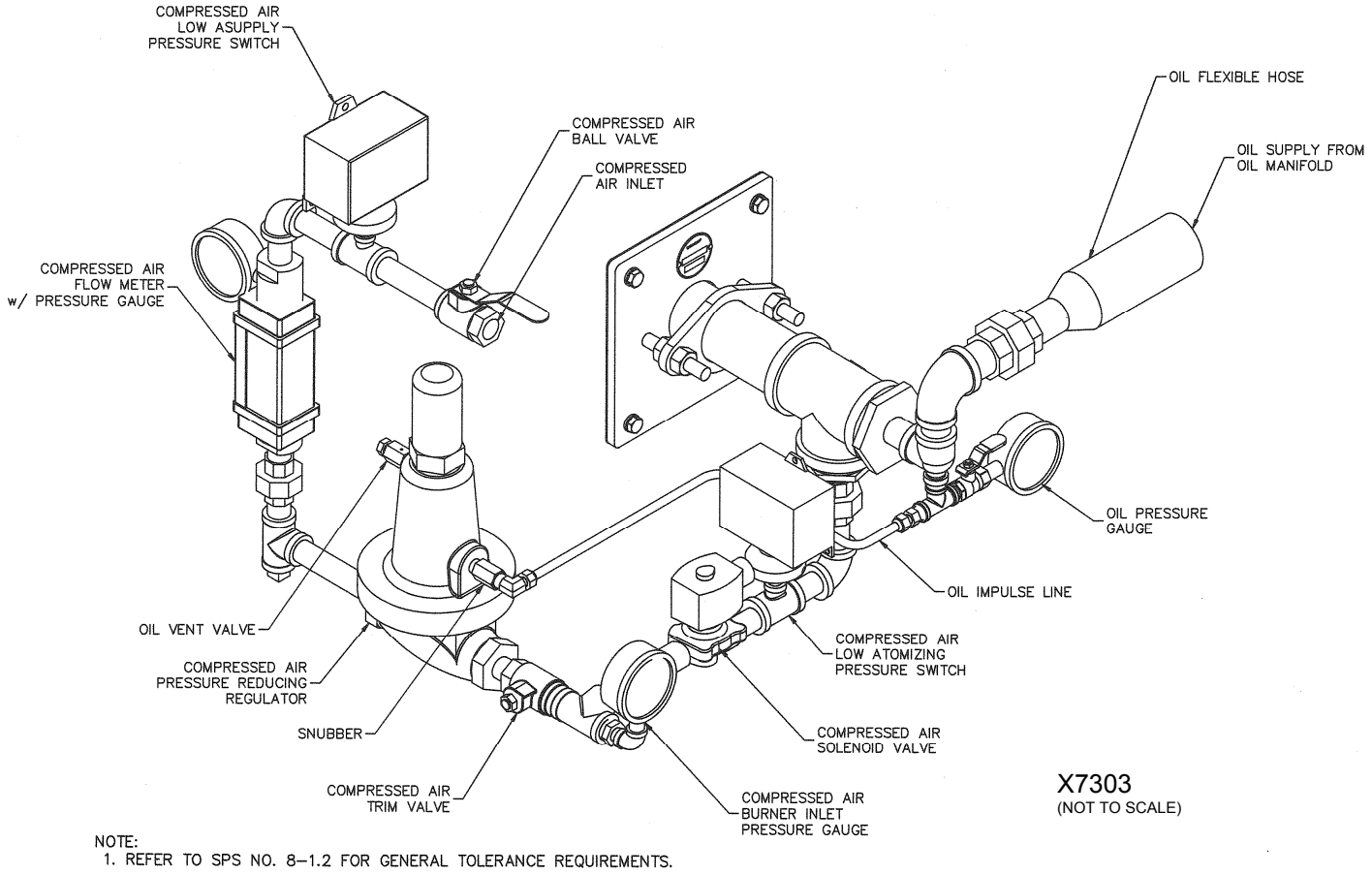

Figure 17. Compressed Air Manifold Detail

3. For the compressed air manifold to function properly, the impulse line and upper chamber of the pressure reducing regulator must be loaded with oil by opening the vent valve on the regulator until oil vents, then closing the vent valve.

4. Final compressed air flow and pressure adjustment is made via the compressed air trim valve (see Figure 17). With the burner at high fire, adjust the trim valve until the compressed air burner inlet pressure gauge, located downstream of the trim valve, reads approximately 60 psig (414 kPa). The compressed air low atomizing air switch is preset at 5 psig (34.5 kPa). Set point adjustment may be required depending on the burner and compressed air piping specifics.

5. Compressed air flow can be read directly from the compressed air flow meter. Refer to Compressed Air Flow Meter section and Figure 19 for detailed instructions on how to read the compressed air flow meter. Verify that both the compressed air flow and burner inlet pressure, from step 4, meet or exceed the values given in Table 6 and/or the additional burner capacity and performance data sheets.

IMPORTANT

For all heavy fuel oil applications, i.e., any oil requiring heating for use, **oil piping must be heat traced** (electric or steam) **and insulated**. Self-regulating heat tracing is recommended to maintain the desired temperature of a given fuel oil to achieve 90 SSU (1.8 x 10^{-5} m^2/sec) or less at the burner. Electrical heat tracing with a nominal rating of 12W/ft (39W/m) covered with a nominal 2" (50mm) fiberglass type insulation is sufficient for most applications.

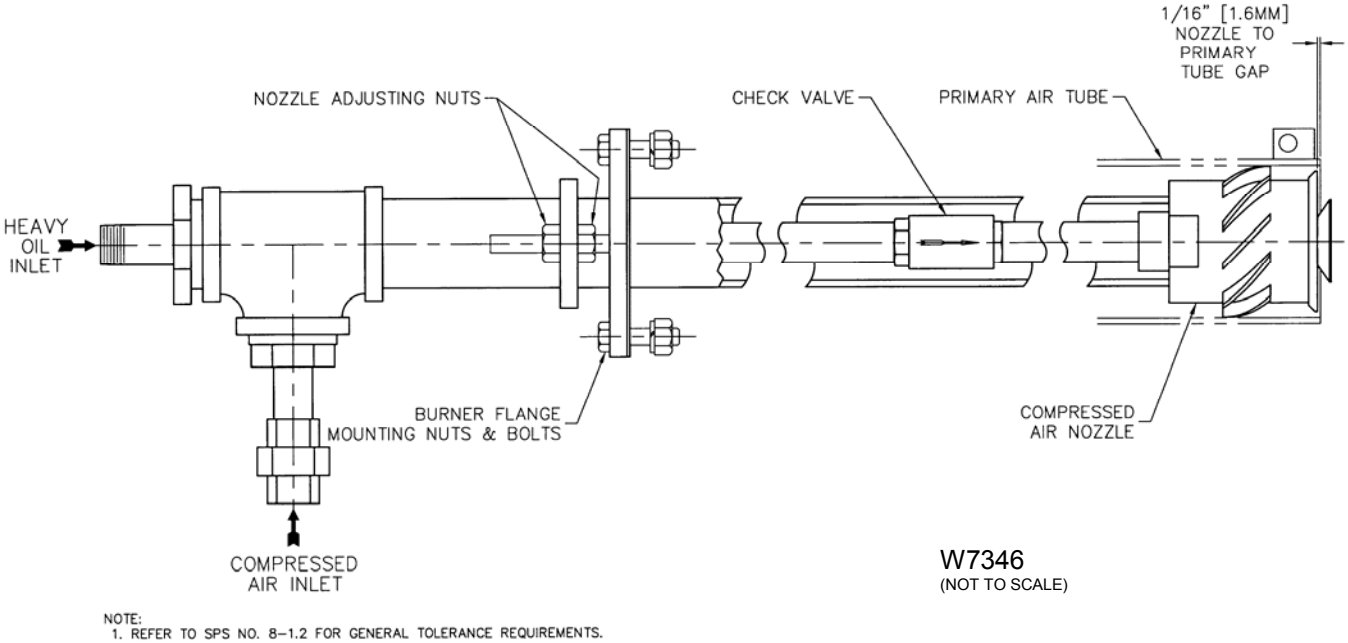

Figure 18. Compressed Air/Oil Insert Assembly

The compressed air insert assembly is inserted in the primary air tube. Tighten the rear flange bolts. The nozzle can be adjusted to maintain the 1/16" (1.6mm) dimension shown in Figure 18.

COMPRESSED AIR FLOW METER

The compressed air flow meter is offered with a standard multi-pressure flow scale.
The multi-pressure flow scale has a vertically graduated scale, calibrated for air in standard cubic feet per minute (scfm) at 1.0 s.g. (70°F at 100 psig); also available in a metric version in liters per second (lps) at 1.0 s.g. (21°C at 6.9 bar). The multi-pressure scale design allows for use at supply pressures from 40 - 130 psig in 10 psig increments (metric version from 3.0 - 9.0 bar in 1 bar increments).

To determine the compressed air flow rate, refer to Figure 19 and proceed as follows:

1. Read the inlet pressure on the pressure gauge of the compressed air flow meter.

2. Select the appropriate inlet pressure (psig) vertical line, or interpolated value closest to the gauge reading, and follow the line upward until it intersects the brightly colored horizontal indicator bar.

3. From the intersecting point on the horizontal indicator bar, follow the slope as shown on the diagonal lines to the 100 psig inlet pressure vertical line and interpolate the scfm or lps flow rate (Note for the example shown in Figure 19, with an inlet pressure of 60 psig, the compressed air flow rate is approximately 40 scfm).

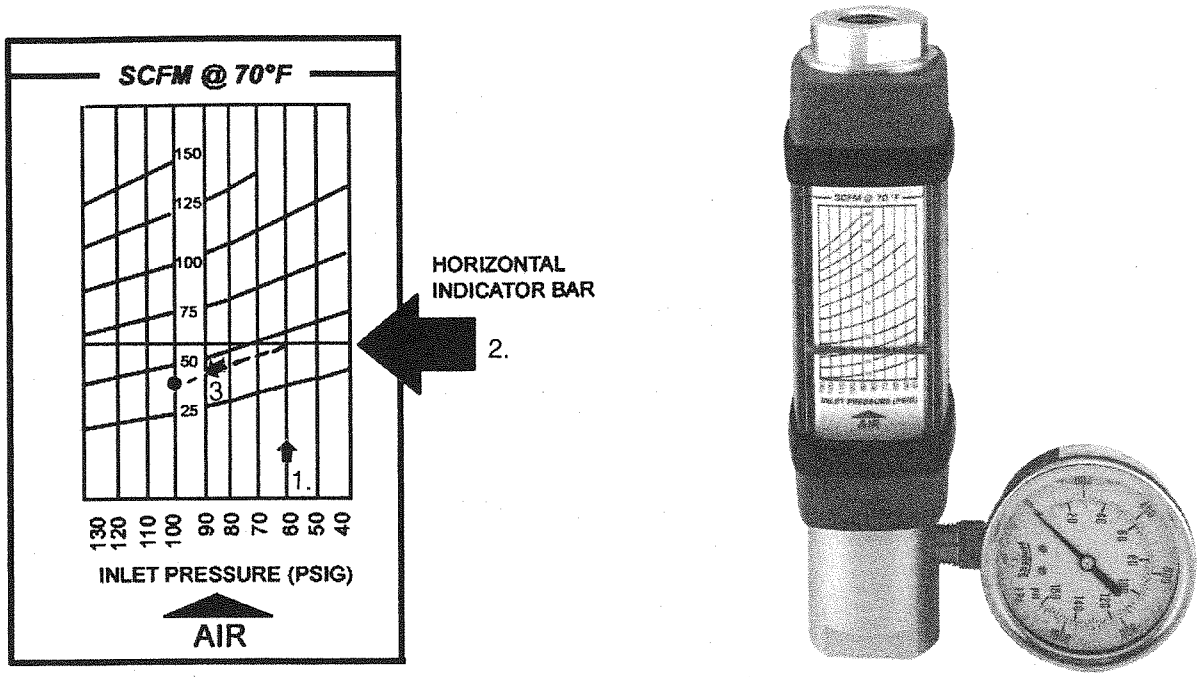

Figure 19. Compressed Air Flow Meter and Scale

To change the compressed air/oil nozzle position.

1. Ensure that the burner is not firing, then close the manual oil valve and the manual compressed air ball valve at the burner.

> **CAUTION**
> If heated heavy oil is being used, allow the oil in the pipe to cool to avoid burns.

2. Drain residual fuel into an appropriate container.

3. Inspect the present orientation of the air/oil nozzle in the burner. Determine if the air/oil nozzle must be moved in or out to maintain the proper distance (see Figure 18).

4. Loosen the nozzle adjusting nuts located on the compressed air/oil insert backplate (see Figure 18).

5. Slide the compressed air/oil insert assembly to achieve the required retraction or extension of the air/oil nozzle.

6. Once the proper positioning of the air/oil nozzle is completed:

   a. Tighten the nozzle adjusting nuts on the backplate.
   b. Attach the oil inlet on the compressed air/oil insert assembly to the oil valve manifold.
   c. Open the manual oil valve. Check for leaks using accepted leak check practices.

N. LIQUID PROPANE (LP) FUEL PIPING SYSTEM

WARNING

Adjustment of this equipment and its components by unqualified personnel can result in fire, explosion, severe personal injury, or even death.

LP is highly flammable and heavier than air. It will accumulate near the ground in the area of a leak and will dissipate relatively slowly. LP or Butane in its liquid state can cause freezing and severe injury.

Hauck **does not recommend** installation of a line-reducing regulator in the LP supply line. If the regulator diaphragm were to total system pressure would be applied to the burner and could result in damage to equipment, including the baghouse, and **result in serious injury to personnel.**

NOTE

Hauck recommends the use of LP manifolds that meet NFPA guidelines. NFPA requires two safety shutoff valves piped in series in the burner's main LP line. A low/high pressure LP switch must be interlocked with the burner's safety shutoff valves. Hauck's LP manifolds have been designed to ensure compliance to NFPA requirements. All piping must be installed in compliance with applicable piping codes and regulations. Equipment must meet the ratings for service as indicated in NFPA 58.

1. Before attaching LP fuel lines, purge the lines with compressed air. Then, leak test piping with compressed air.

2. Connect the main LP line at the appropriate connection on the burner skid. The capacity of the LP fuel system should be 1.5 times the rated capacity of the burner.

3. If Hauck has supplied the LP pump set for this application, consult the pump installation instructions for information on this unit, taking special care to avoid upward loops and any other conditions that may trap vapor.

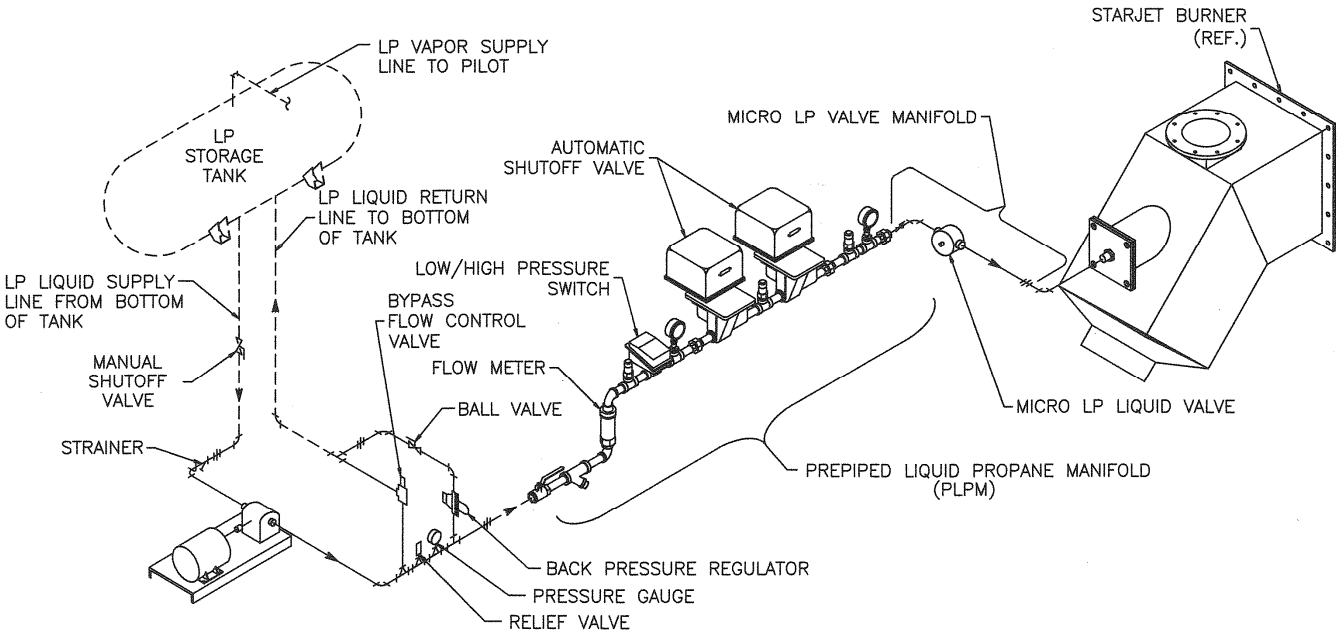

SJ MODEL NO.	MAX. LIQ. PROPANE	MAX. ΔP	APPROX. PUMP H.P. (NOTE1)	INITIAL START-UP PRESSURE SETTINGS (NOTE 2) BYPASS FLOW CONTROL VALVE 50-150 PSIG SPRING [345-1030 KPA]	INITIAL START-UP PRESSURE SETTINGS (NOTE 2) BACK PRESS. REGULATOR 50-230 PSIG SPRING [345-1590 KPA]	DISCHARGE TO BURNER MIN. PIPE SIZE	RETURN TO SUPPLY MIN. PIPE SIZE
150	300 GPH [18.8 LPM]	125 PSIG [860 KPA]	2	100% PROPANE 235 PSIG [1620 KPA]	100% PROPANE 210 PSIG [1450 KPA]	1" [DN 25]	1" [DN 25]
200	445 GPH [28.0 LPM]					1" [DN 25]	1 1/4" [DN 32]
260	541 GPH [34.2 LPM]			50% PROPANE 50% BUTANE 170 PSIG [1170 KPA]	50% PROPANE 50% BUTANE 145 PSIG [1000 KPA]	1 1/4" [DN 32]	1 1/4" [DN 32]
360	830 GPH [52.3 LPM]		3			1 1/4" [DN 32]	1 1/2" [DN 40]
520	1063 GPH [67.0 LPM]					1 1/2" [DN 40]	1 1/2" [DN 40]
580	1274 GPH [80.3 LPM]	100 PSIG [690 KPA]		100% BUTANE 95 PSIG [655 KPA]	100% BUTANE 70 PSIG [480 KPA]	1 1/2" [DN 40]	2" [DN 50]
750	1648 GPH [104.0 LPM]		5			1 1/2" [DN 40]	2" [DN 50]

NOTES:
1. PUMP H.P. MAY VARY WITH PUMP MANUFACTURER.
2. SPRING PRESSURE PLUS TANK PRESSURE.
3. ALL PIPING TO BE SCH. 80 BLACK IRON PIPE.
4. CONSULT NFPA 58 FOR APPLICABLE EQUIPMENT RATINGS AND INSTALLATION.
5. PUMP SET MUST BE INSTALLED BELOW BOTTOM OF LP STORAGE TANK WITH NO UPWARD LOOPS.
6. USE RECOMMENDED PIPE SIZE OR LARGER BETWEEN PUMP SET AND BURNER MANIFOLD.
7. STANDARD PILOT IS USED WITH LP VAPOR, SUPPLY FROM TOP OF STORAGE TANK (LP VAPOR CONNECTION) OR OTHER SOURCE.
8. PIPE SIZING BASED ON FRICTIONAL PRESSURE LOSSES OF LESS THAN 1.5 PSI.

Y4059
NOT TO SCALE)

Figure 20. Typical Schematic of LP Piping

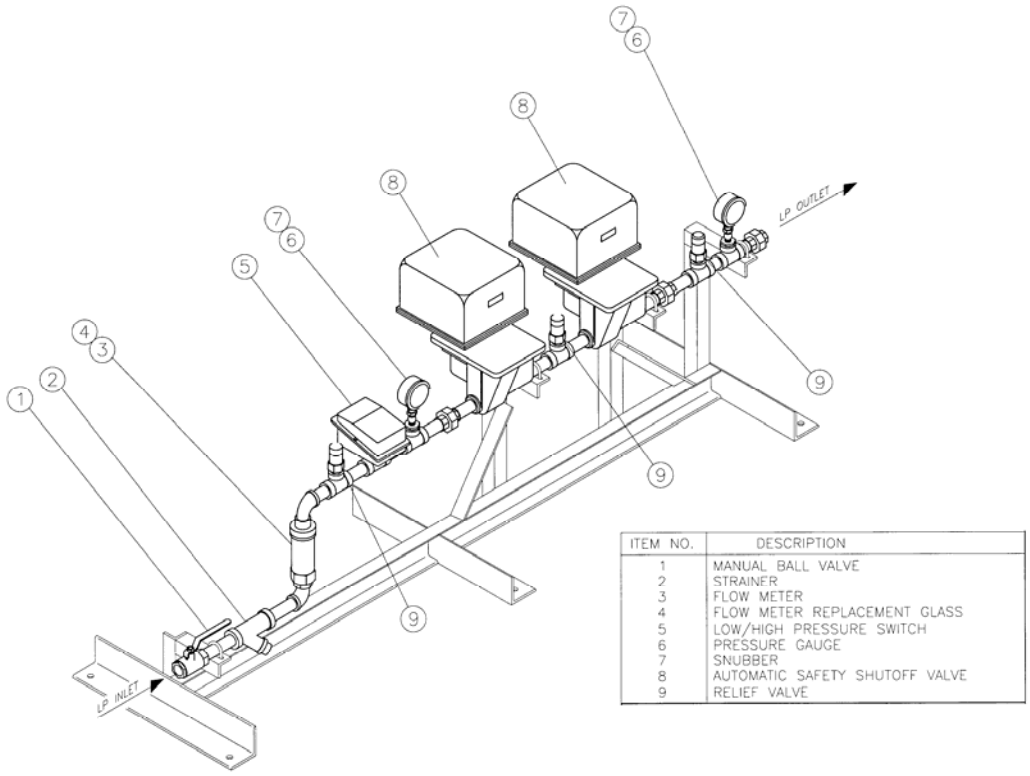

ITEM NO.	DESCRIPTION
1	MANUAL BALL VALVE
2	STRAINER
3	FLOW METER
4	FLOW METER REPLACEMENT GLASS
5	LOW/HIGH PRESSURE SWITCH
6	PRESSURE GAUGE
7	SNUBBER
8	AUTOMATIC SAFETY SHUTOFF VALVE
9	RELIEF VALVE

NOTE
LP manifold must be mounted in a horizontal position. Mount as close to the burner as possible. Mount manifold below the burner's center-line.

X6190
(NOT TO SCALE)

Figure 21. PLPM Prepiped LP Manifold Detail

WARNING

Hauck **does not recommend** installation of a line-reducing regulator in the LP supply line. If the regulator diaphragm were to rupture, total system pressure would be applied to the burner and could result in damage to equipment, including the baghouse, and **result in serious injury to personnel.**

CAUTION

Hauck strongly recommends that a bypass flow control valve and a backpressure regulator (available from Hauck) be installed in all LP systems and piped as shown in Figure 20.

4. Close the manual ball valve upstream of the PLPM manifold (see Figure 21).
5. Open the manual shutoff valve on the inlet side of the pump.
6. Turn on the LP pump to start LP flow.
7. Check all LP lines and connections for leaks following accepted standards and practices.
8. Open the manual ball valve upstream of the PLPM manifold and check the manifold for leaks (see Figure 21). After burner has been ignited and LP is flowing to the burner nozzle, check all piping for leaks.

WARNING

Frost or icing is an indication of an LP leak. It is possible for a leak to occur without such evidence. Although the LP supply is initially in a liquid state, as it is vaporized it becomes heavier than air and accumulates near the ground and dissipates relatively slowly, becoming highly flammable. Extreme care should be exercised with LP fuels and systems.

NOTE

The system shown in Figure 20 is designed for optimum performance at ambient air temperatures above 40°F (5°C). For operation at temperatures below 40°F, consult Hauck for recommendations.

9. Adjustment of LP supply pressure:

   a. Install an amp probe on the LP pump power supply line.

CAUTION

Do not exceed the maximum LP pump motor nameplate amp load at any time while making adjustments.

   b. Close the ball valve between the backpressure regulator and the tank to temporarily take the regulator out of the system (see Figure 20).

   c. Adjust the bypass flow control valve to the following initial settings:

100% Commercial Propane	235 psig (1620 kPa)
50/50 Propane/Butane	170 psig (1170 kPa)
100% Butane	95 psig (655 kPa)

NOTE

If pump motor nameplate amperage is exceeded, reduce pressure in Step 9.c to below nameplate amp rating.

   d. Reopen the bypass flow control valve closed in Step c.

e. Adjust the backpressure regulator to the following initial settings:

100% Commercial Propane	210 psig (1450 kPa)
50/50 Propane/Butane	145 psig (1000 kPa)
100% Butane	70 psig (480 kPa)

NOTE

If motor amperage in Step 9.c exceeded nameplate amp rating, set backpressure regulator at 25 psig (172 kPa) less than the bypass flow control valve setting.

These settings are initial settings only. Settings are based on 60°F (15.5°C) fuel temperature plus normal pump pressure; pump differential pressure = 100 psig (700 kPa).

Settings will have to be readjusted for changes in temperature and operation. The bypass flow control valve should always be set approximately 25 psig (172 kPa) above the backpressure regulator to insure pump protection.

10. a. Be sure the LP metering valve is in the low fire position. This valve is factory set to travel approximately 90 degrees starting at position 1 to 10. These positions can be modified to adjust to a higher or lower firing rate. If adjusting high fire, low fire must be reset.

    b. Read and record LP metering valve settings and flow rates using the in-line LP flow meter (gal/min or liters/min LP liquid) provided with the burner.

11. Check rotation of the combustion blower. The impeller should rotate toward the blower discharge.

12. Inspect and operate the plant exhaust damper control. The exhaust damper should be capable of maintaining a consistent negative pressure at the drum front bulkhead of negative 0.2 "wc to negative 0.5 "wc (negative 5 to negative 13mm wc) from low to high firing rates for most applications.

13. The low/high LP pressure switch is factory set at a low set point of 165 psig (1140 kPa) and a high set point of 230 psig (1590 kPa). Set point adjustments may be required depending on the burner and LP piping specifics.

14. Burner flame spin vanes adjustment can be set at 0 to 60 degrees; 0 degrees narrows the flame, 60 degrees widens the flame, and 30 degrees is a nominal starting point.

15. Burner air adjustments: (see Section P).

16. Install a gas sampling probe in the dryer drum rear (see Application Sheet GJ73).

17. Connect a gas analyzer to the gas sampling probe (see Application Sheet GJ73). Exhaust gas readings should be taken at operating tonnage.

NOTE

Different nozzles are required when burning liquid propane, butane, or a mixture of propane/ butane. Consult Hauck for your specific fuel nozzle requirements.

WARNING

Do not attempt to reposition the LP nozzle while the burner is firing. Considerable pressure exists under firing conditions. Attempting to adjust the LP nozzle while the burner is firing may result in equipment damage or injury to personnel.

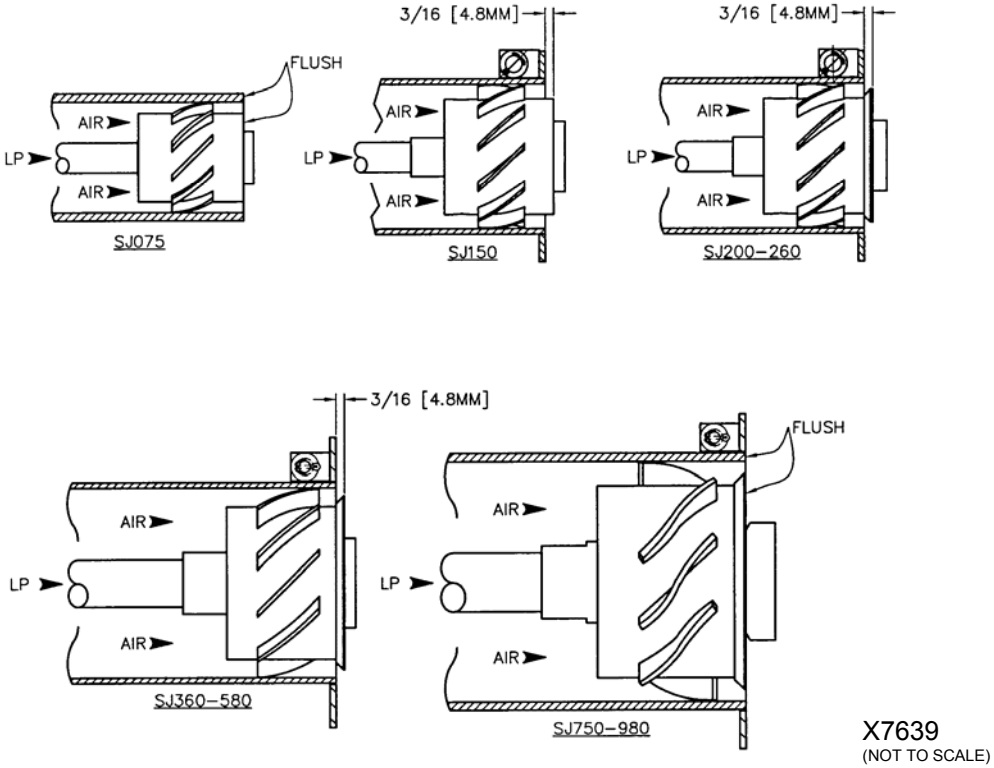

Figure 22. LP Nozzle Position

To change the LP nozzle position:

1. Shut the LP manual ball valve upstream of the LP safety shutoff valves.

2. Disconnect the burner LP insert assembly from the LP valve manifold, using the union located downstream of the flexible hose.

3. Note the present orientation of the LP nozzle while assembled in the burner. Determine if the nozzle must be retracted into or extended out of the primary tube (see Figure 22).

4. Remove the four bolts securing the backplate to the burner.

5. Loosen the jam nut on the backplate of the burner LP insert assembly.

6. Rotate the backplate to effect the required retraction or extension of the nozzle. One full rotation of the backplate will move the nozzle approximately 0.1" (2.5mm).

7. Once the proper positioning of the nozzle is completed:

   a. Tighten the jam nut.
   b. Attach the burner LP insert assembly to the LP valve manifold, using the union provided.
   c. Open the LP valve upstream of the safety shutoff valves.

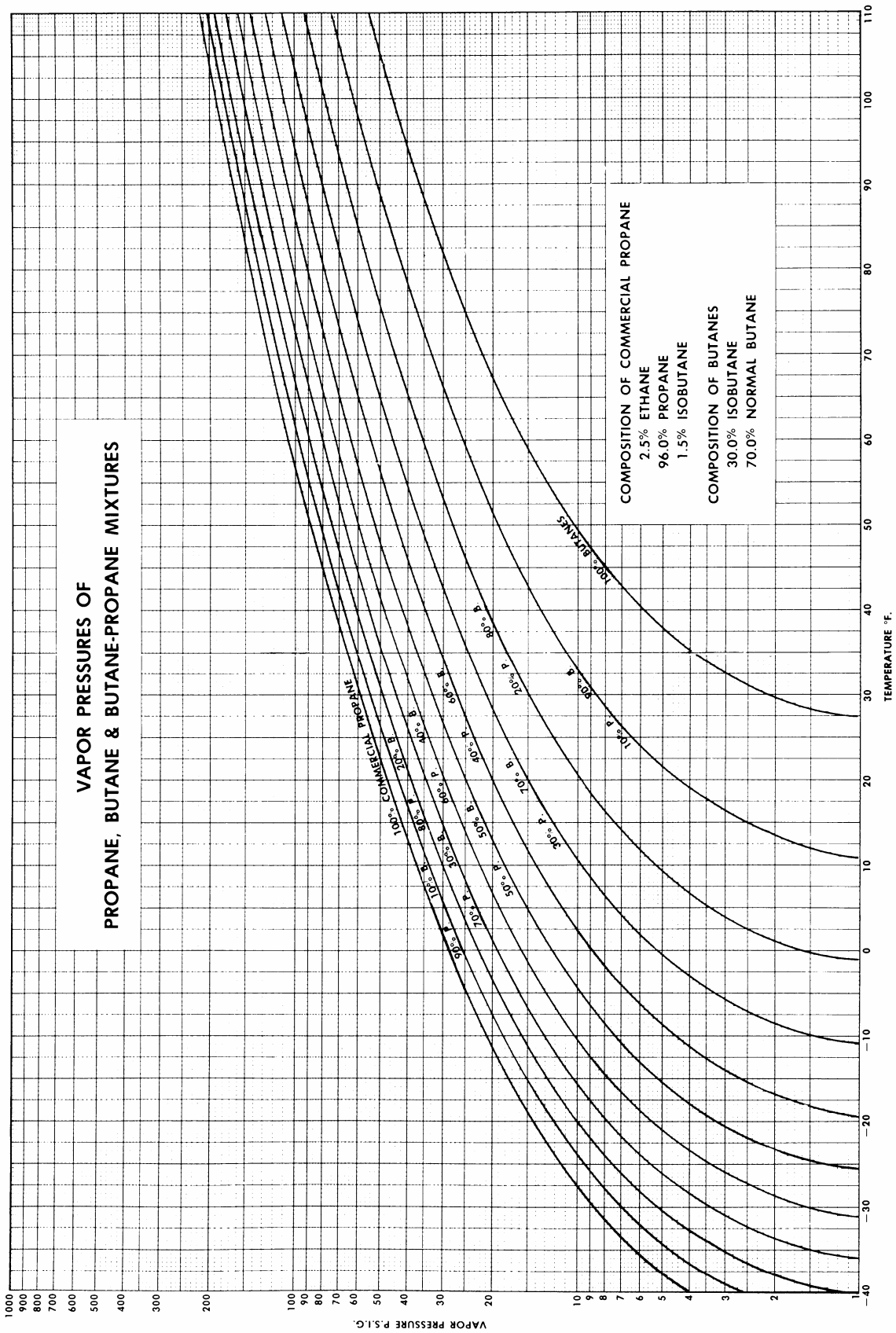

Figure 23. Vapor Pressures of Propane, Butane & Butane-Propane Mixtures

O. BURNER PILOT SYSTEM

The StarJet Burner incorporates an air inspirited via gas (AIG) pilot system (see Figure 24). The pilot and UV scanners should always be oriented to point downward. As delivered, the pilot and UV scanners should be properly oriented, based on the air inlet orientation specified when the burner was ordered. Adjustment and operation of the pilot system is detailed below.

1. Before connecting to the pilot, the gas line should be purged to remove any dirt. Connect the pilot gas supply line to the inlet of the pilot gas shutoff valve. **Size the pilot gas supply line to avoid excessive pressure drops**. For pilot gas supply lines up to 25 ft (7.6m), use 1/2 NPT (DN 15) or larger piping.

2. Constant gas pressures ranging from 15 psig (103 kPa) minimum to 25 psig (172 kPa) maximum must be available at the inlet of the Hauck gas pilot manifold. Pilot capacity should not exceed 150,000 Btu/hr (44kW).

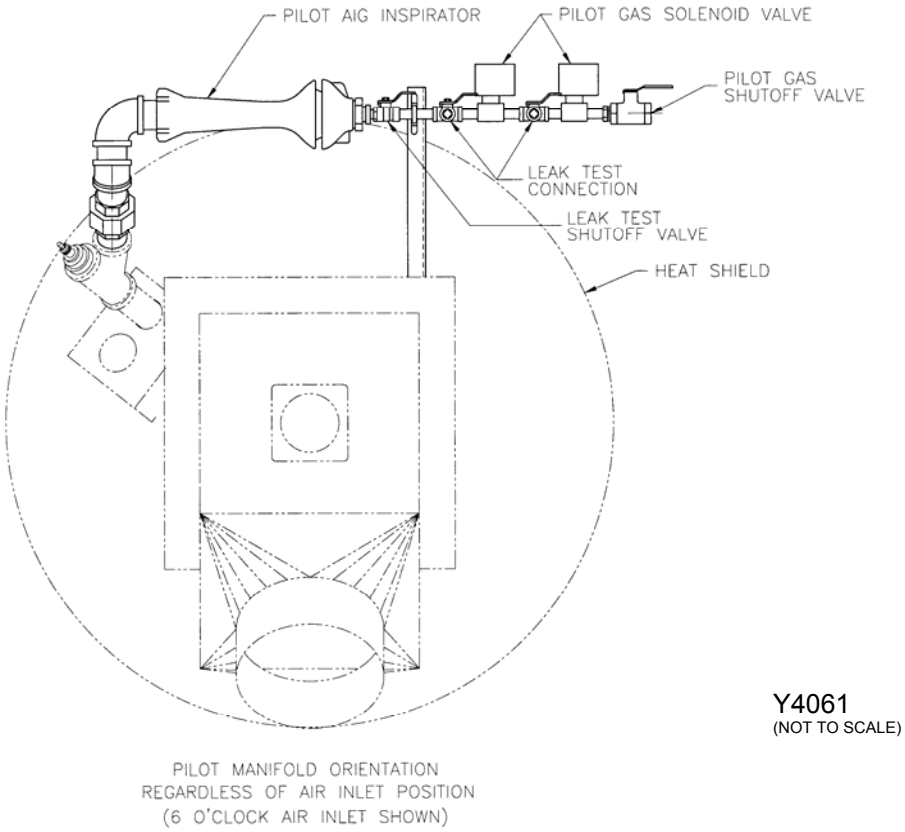

Figure 24. Pilot Manifold Detail

3. The spark wire gap is factory set at 1/8" (3 mm). This gap can be changed by carefully removing the pilot internals. Bend the spark wire to adjust, reinsert, and check the gap. For field adjustments, a U.S. 5¢ coin with 0.08" (2 mm) thickness can be used as a gauge for adjusting the spark gap.

4. Complete the initial pilot adjustment of the air shutter as follows (see Figure 25):

   a. Loosen, but do not remove, the locking thumbscrew.
   b. Adjust the air shutter to approximately 1/4" (6.4mm) gap opening.
   c. Securely tighten the locking thumbscrew.
   d. Slowly open the gas flow valve and light the pilot by means of electric ignition.

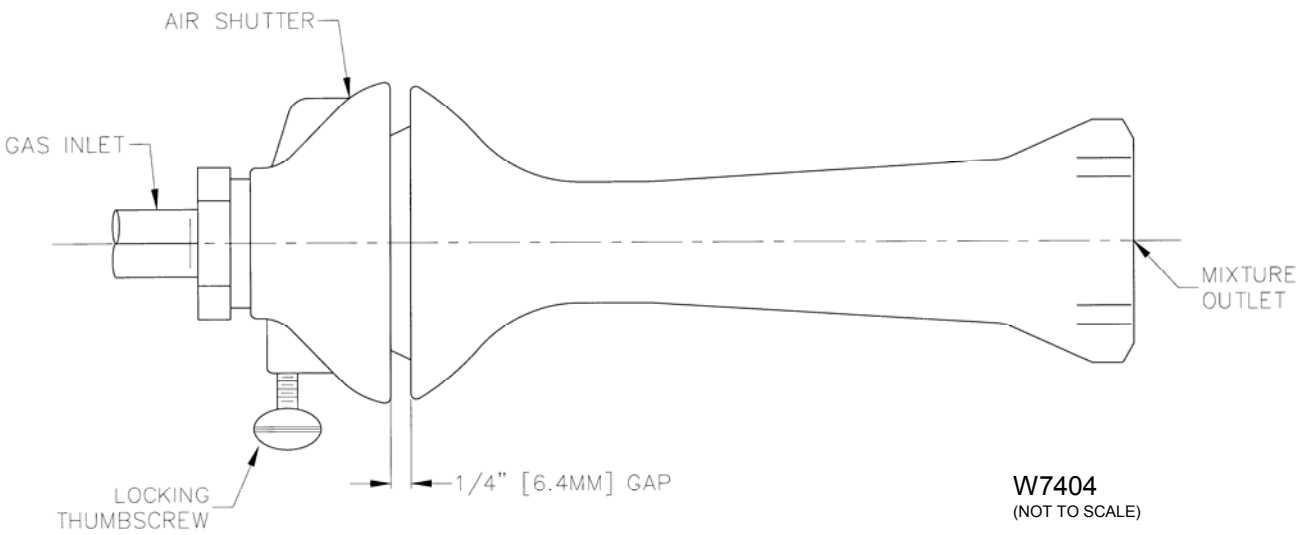

Figure 25. Pilot AIG Inspirator

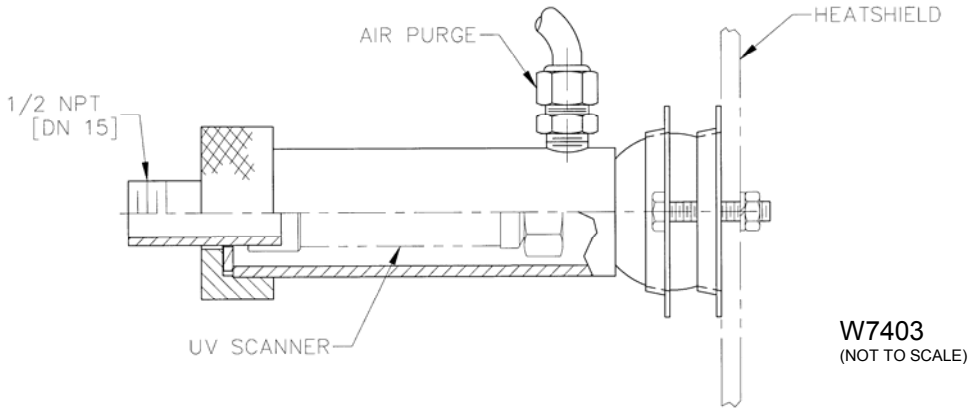

Figure 26. Pilot Scanner & Adapter

P. OPERATION

WARNING

Adjustment of this equipment and its components by unqualified personnel can result in fire, explosion, severe personal injury, or even death.

1. The StarJet air/fuel system uses a single control motor for modulation of burner air and fuel. This control motor travels 90° from low to high fire, driving both the burner air and fuel valves simultaneously.

2. Only 40% of total required burner air is passed through the burner; this includes burner primary air which is on at all times on all fuels, and secondary air. The remaining air for combustion is pulled past the burner cone by the plant exhaust system.

3. The plant exhaust fan must be running with it's damper open sufficiently for the proper purge time. The minimum purge time is the time required for four volumes of air to flow through the entire combustion and exhaust system (including the baghouse and exhaust stack).

4. A constant negative 0.25"wc (6.3mm wc) draft is important in maintaining a constant air flow past the burner without puffing the drum front. This negative pressure can easily be maintained with a Hauck DPS digital pressure control system. The negative pressure tap should be located on the drum front bulkhead between the burner and the O.D. of the drum at the burner centerline.

5. Prior to light off, ensure that the secondary air low fire limit switch (see Figure 27) is set so the switch contacts are closed (engaged) by the bottom of the pointer. When the burner is positioned above low fire, the switch contacts should open. Consult control panel instructions for wire and/or terminal numbers.

6. Ensure that the low fire fuel limit switches, located on the respective fuel manifolds, are set to have closed contacts when the fuel valve is at low fire.

7. Initial burner component settings for all fuels are presented in Table 7 and 8, and should be verified prior to burner light off.

8. When making any adjustments to the burner, exhaust gas measurements should be taken to verify that complete combustion is taking place (see Application Sheet GJ73 for general information on conducting exhaust gas analysis).

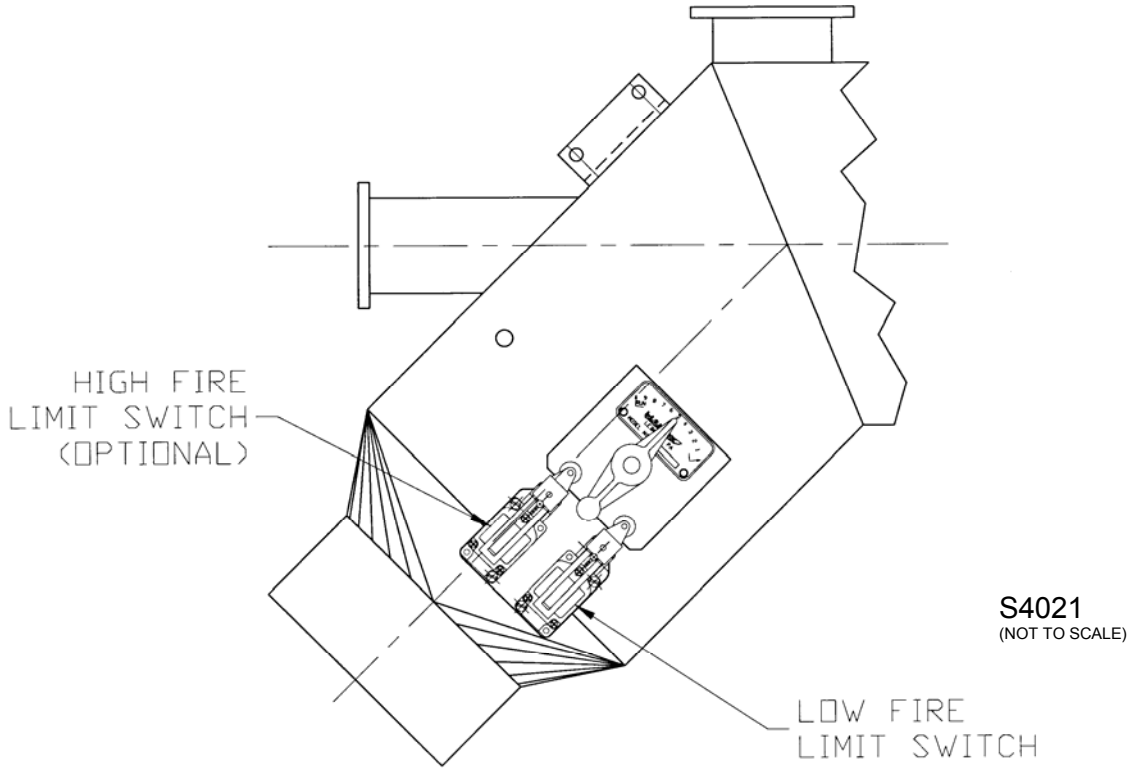

Figure 27. Low Fire Limit Switch

StarJet Model Startup Settings For Natural Gas & LP

BURNER	MODEL	FUEL	LOW VELOCITY SLEEVE[1]	HIGH VELOCITY SLEEVE[1]	CONE SETTING[2]	ATOMIZER TYPE	ATOMIZER SETTING[3]	PRIMARY AIR RING[4]	GAS VALVE TRAVEL	GAS PRESSURE[5] (psig)	LP VALVE	LP PRESSURE[5]	NOZZLE SIZE	AIR BVA STROKE
150	G	GAS	3/4" (19 mm)	NO	RETRACTED	25°	+3/16" (4.8 mm)	NO	3 - 10	2 psig (17 kPa)				0.5-9.5
		LP	NO	3/4" (19 mm)		LP		YES			1 - 7 HB - 1/2 - 18	210 psig (1450 kPa)	0.062" (1.59 mm)	
200	G	GAS	3/4" (19 mm)	NO	RETRACTED	25°	+3/16" (4.8 mm)	NO	1.5-9	2.5 psig (17 kPa)				0.5-9.5
		LP				LP		YES			1 - 7 H - 1/2 - 20	210 psig (1450 kPa)	0.046" (1.19 mm)	
260	G	GAS	3/4" (19 mm)	NO	RETRACTED	25°	+3/16" (4.8 mm)	NO	2 - 10	2.5 psig (17 kPa)				0.5-9.5
		LP	NO			LP		YES			1 - 7 H - 1/2 - 20	210 psig (1450 kPa)	0.059" (1.50 mm)	
360	E	GAS	3/4" (19 mm)	NO	RETRACTED	45°	+3/16" (4.8 mm)	NO	1.5-10	3.5 psig (24 kPa)				0.5-9.5
		LP				LP		YES			1 - 9 H - 1/2 - 24	210 psig (1450 kPa)	0.070" (1.78 mm)	
520	E	GAS	3/4' (19 mm)	NO	RETRACTED	45°	+3/16" (4.8 mm)	NO	1 - 10	4.75 psig (33 kPa)				0.5-9.5
		LP	1/4" (6.4 mm)			LP		YES			1 - 8 J - 1 - 29	200 psig (1380 kPa)	0.082" (2.08 mm)	
580	F	GAS	3/4" (19 mm)	NO	RETRACTED	45°	+3/16" (4.8 mm)	NO	1 - 10	5 psig (34 kPa)				0.5-9.5
		LP	1/4" (6.4 mm)			LP		YES			1 - 8 J - 1 - 29	190 psig (1310 kPa)	0.093" (2.37 mm)	
750	G	GAS	1" (25 mm)	NO	RETRACTED	25°	+3/16" (4.8 mm)	NO	1 - 10	5 psig (34 kPa)				0.5-9.5
		LP				LP	0" (0 mm)	YES			1 - 9 K - 1 - 38	200 psig (1380 kPa)	0.099" (2.53 mm)	

NOTES:

1. Sleeve positions refer to the dimension that sleeve extends out from face of secondary air tube. A "NO" in this column indicates sleeve **should not** be used with that fuel.
2. Cone settings to refer to the position of the cone relative to the burner nozzle. A retracted setting would be one where the cone is positioned as far back (towards the burner) on the mounting tabs as possible.
3. Atomizer settings refer to the dimension that the face of the atomizer extends beyond the primary air tube (+) or is flush with the primary air tube (0).
4. LP ring to be used for LP firing only ("NO" = not installed "YES" = installed).
5. Fuel pressure readings are measured at a test point upstream of the fuel flow control valve. Fuel pressure settings are for maximum capacity. Final settings may be lower based on capacity required. LP pressures listed are for 60°F (15.5°C).

Table 7. Initial Burner Component Settings for Natural Gas & LP

StarJet Model Startup Settings For Oil (Low Pressure & Compressed Air Atomizer)

BURNER	MODEL	FUEL	LOW VELOCITY SLEEVE[1]	HIGH VELOCITY SLEEVE[1]	CONE SETTING[2]	ATOMIZER TYPE	ATOMIZER SETTING[3]	PRIMARY AIR RING[4]	MAIN OIL VALVE POSITION	BYPASS OIL VALVE & FLOW (psig)	OIL PRESSURE[5] (psig)	COMPRESSED AIR PRESSURE[6] (psig)	AIR BVA STROKE
150	G	OIL LOW PRESS.	NO	3/4" (19 mm)	RETRACTED	25°	+3/16" (4.8 mm)	NO	1 - 10 BL - 1/2 - 16	S - 3 - 7 0.75 - 1.5 gpm (2.8 - 5.7 lpm)	35 psig (241 kPa)		0.5-9.5
		OIL COMP. AIR		1 3/4" (44 mm)		Compressed Air	-1/16" (-1.6 mm)				50 psig (345 kPa)	45 psig (310 kPa)	
200	G	OIL LOW PRESS.	1 1/4" (32 mm)	3/4" (19 mm)	RETRACTED	25°	+3/16" (4.8 mm)	NO	1 - 10 FL - 1/2 - 20	S - 3 - 9 0.75 - 1.5 gpm (2.8 - 5.7 lpm)	35 psig (241 kPa)		0.5-9.5
		OIL COMP. AIR	NO	1 3/4" (44 mm)		Compressed Air	-1/16" (-1.6 mm)				60 psig (414 kPa)	50 psig (345 kPa)	
260	G	OIL LOW PRESS.	1 1/4" (32 mm)	3/4" (19 mm)	RETRACTED	25°	+3/16" (4.8 mm)	NO	1 - 10 FL - 1/2 - 20	S - 3 - 9 0.75 - 1.5 gpm (2.8 - 5.7 lpm)	45 psig (310 kPa)		0.5-9.5
		OIL COMP. AIR	NO	1 3/4" (44 mm)		Compressed Air	-1/16" (-1.6 mm)				60 psig (414 kPa)	50 psig (345 kPa)	
360	E	OIL LOW PRESS.	3/4" (19 mm)	3/4" (19 mm)	RETRACTED	45°	+3/16" (4.8 mm)	NO	1 - 10 FL - 1/2 - 24	S - 3 - 1610 1.5 - 2.0 gpm (2.8 - 7.6 lpm)	45 psig (310 kPa)		0.5-9.5
		OIL COMP. AIR	NO	1 3/4" (44 mm)		Compressed Air	-1/16" (-1.6 mm)				60 psig (414 kPa)	58 psig (400 kPa)	
520	E	OIL LOW PRESS.	3/4" (19 mm)	1/2" (13 mm)	RETRACTED	45°	+3/16" (4.8 mm)	NO	1 - 10 GL - 1 - 29	S - 3 - 1610 1.5 - 2.0 gpm (2.8 - 7.6 lpm)	45 psig (310 kPa)		0.5-9.5
		OIL COMP. AIR	NO	1 3/4" (44 mm)		Compressed Air	-1/16" (-1.6 mm)				60 psig (414 kPa)	58 psig (400 kPa)	
580	F	OIL LOW PRESS.	3/4" (19 mm)	1/2" (13 mm)	RETRACTED	45°	+3/16" (4.8 mm)	NO	1 - 10 GL - 1 - 29	S - 3 - 1610 1.5 - 2.0 gpm (2.8 - 7.6 lpm)	70 psig (483 kPa)		0.5-9.5
		OIL COMP. AIR	NO	1 3/4" (44 mm)		Compressed Air	-1/16" (-1.6 mm)				52 psig (359 kPa)	43 psig (296 kPa)	
750	G	OIL LOW PRESS.	NO	1" (25 mm)	RETRACTED	25°	+3/16" (4.8 mm)	NO	1 - 10 GL - 1 - 29	S - 3 - 1610 2.0 - 2.5 gpm (7.6 - 9.5 lpm)	65 psig (448 kPa)		0.5-9.5
		OIL COMP. AIR		1 3/4" (44 mm)		Compressed Air	-1/16" (-1.6 mm)				54 psig (372 kPa)	40 psig (276 kPa)	

NOTES:

1. Sleeve positions refer to the dimension that sleeve extends out from face of secondary air tube. A "NO" in this column indicates sleeve **should not** be used with that fuel.
2. Cone settings to refer to the position of the cone relative to the burner nozzle. A retracted setting would be one where the cone is positioned as far back (towards the burner) on the mounting tabs as possible.
3. Atomizer settings refer to the dimension that the face of the atomizer extends beyond the primary air tube (+) or is retracted inside the primary air tube (-).
4. LP ring to be used for LP firing only ("NO" = not installed).
5. Fuel pressure readings are measured at a test point upstream of the fuel flow control valve. Fuel pressure settings are for maximum capacity. Final settings may be lower based on capacity required.
6. Compressed air pressure readings are measured at the pressure gauge downstream of the compressed air regulator.

Table 8. Initial Burner Component Settings for Oil

Q. FLAME SHAPE ADJUSTMENTS

There are two devices on the burner which can affect the flame shape: the spin vane adjustment ring and the secondary air sleeve. The spin vane adjustment ring is the principle means of adjusting flame shape.

The spin vane adjustment ring uniformly adjusts the angle of the secondary air spin vanes which impart spin to the secondary air stream as it leaves the burner. These vanes, when set at an angle, increase the air/fuel mixing rate and produce a shorter, bushier flame. The effect can be minor or severe, depending on the angle setting of the vanes. The greater the angle (adjustable from 0-60 degrees), the shorter and bushier the flame. The amount of secondary spin is read on the spin vane indicator, mounted on the spin vane setting indicator plate. In some applications, high spin may cause overheating of the drum front bulkhead and combustion zone flights. In such cases, reduce the spin angle as necessary until such condition is eliminated.

Spin Vane Adjustment:

1. Shut down the burner system.

2. Loosen the locking bolt and using the spin vane adjusting lever, rotate the ring until the spin vane indicator reads 30 degrees.

3. Tighten the locking bolt.

Burners Equipped With Secondary Air Sleeve:

The secondary air sleeve prevents the free expansion of the secondary air as it leaves the secondary air tube. This concentrates the secondary air, which improves the atomization of fuel oil. The farther the sleeve is extended, the narrower the flame becomes. Typically, the sleeve should not be extended more than 3/4" (19 mm). The optimal sleeve position is dependent on the specific fuel used and is more critical with heavy oil. If the sleeve is not extended far enough, the oil may not be atomized fully and cause a dark flame. On heavy oil, if the sleeve is extended too far, the atomized oil spray will impinge and deposit on the sleeve. Refer to the start-up settings, Tables 8 and 9, for nominal sleeve settings.

WARNING

The HIGH VELOCITY secondary air sleeve is for use with:

OIL FIRING	**MODEL 075 – 750**
LP FIRING	**SJ150**
GAS FIRING	**NOT USED WITH GAS FIRING ON ANY BURNER MODEL**

If your application requires a HIGH VELOCITY SLEEVE for oil firing, be sure to remove the HIGH VELOCITY SLEEVE for natural gas firing. If you are unsure which model sleeve is installed on your burner, consult Hauck.

Secondary Air Sleeve Adjustment:

1. Shut down the burner system.
2. Allow the burner to cool to the touch.
3. In the front of the burner is a slot (see Figure 28) to adjust the sleeve:
   a. Loosen the sleeve locking bolt.
   b. Relocate the sleeve to the desired extension distance (Refer to Table 7 or 8 for nominal sleeve extensions). The extension distance is the distance the sleeve is extending out the end of the burner secondary air tube (see Figure 28).
   c. Tighten the sleeve locking bolt.

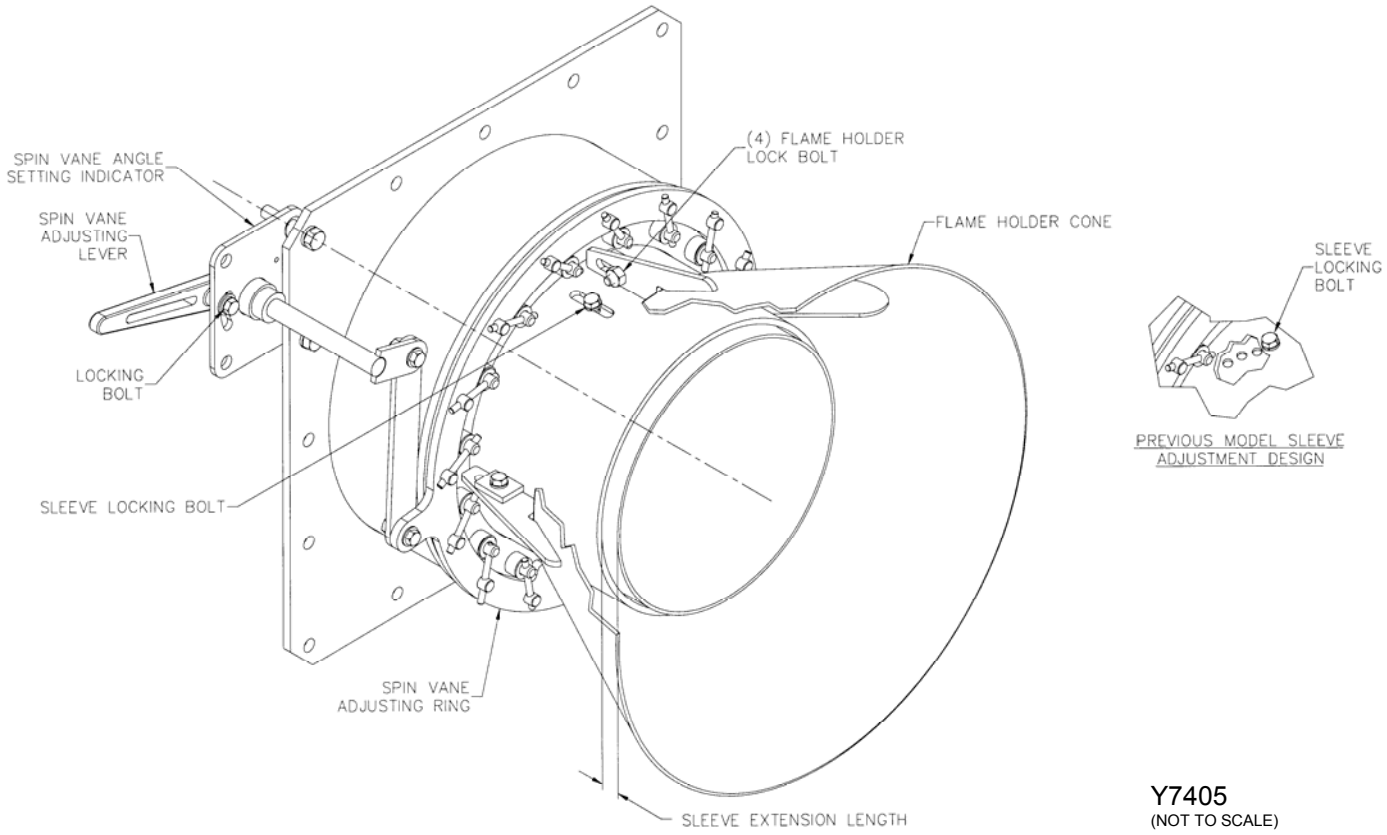

Figure 28. Secondary Air Sleeve Adjustment and Spin Vane Adjusting Ring

R. FLAME HOLDER CONE ADJUSTMENT

The flame holder cone assists in the stabilization of the StarJet's flame. Normally, the cone should be positioned so that it is completely retracted (as far towards the burner as possible). The cone should also be set square with the burner. To adjust the position of the flame holder cone:

1. Loosen the four flame holder locking bolts.

2. Position the flame holder cone. Normal position is fully retracted in the adjustment range.

3. Place a straight edge horizontally across the flame holder cone.

4. Measure the distance from the straight edge to the front of the burner on both the left and right sides. Adjust the cone to get the same measurement on both sides.

5. Tighten the flame holder locking bolt on both the left and right sides.

6. Place the straight edge vertically on the flame holder cone.

7. Adjust the cone to get the same measurement on both the top and bottom.

8. Tighten the flame holder locking bolt on the top and bottom.

S. MAINTENANCE

The Hauck StarJet Burner has minimal internal moving parts and is relatively maintenance free. However, there are a few items that should be periodically checked.

1. Check the burner secondary air damper, fuel control valves, and their associated linkage for proper operation.

2. Check and lubricate all points of valve linkage. Mark linkage so any slippage will be detected and corrected.

3. Grease fittings located on the secondary air damper bearings should be checked and lubricated once a month.

4. For burners fired on oil:
   Dirt can clog the atomizing air nozzle, as well as cause problems firing the burner. If the nozzle is dirty, fuel oil will not atomize properly and will result in lower combustion efficiency. Twice a year (or more frequently when firing heavy oil, recycled oil, or in very dusty conditions), remove and clean the burner oil insert tube and nozzle assembly as described below:

   a. Shut off the oil flow to the burner.

   b. Note the relative location of the nozzle with respect to the primary air tube.

   c. Remove the bolts, which secure the burner backplate to the burner body.

   d. Remove the burner backplate with its attached oil insert tube and nozzle.

   e. Disassemble the nozzle. Clean all of the components of oil and other foreign material that may be plugging the nozzle holes. If used with heavy oil, remove the nozzle and soak in a suitable solvent to loosen any oil deposits. Scrape the nozzle body and holes (if necessary) **using wooden tools or a plastic bristle brush only, being careful not to damaged machined parts.**

   f. Reassemble the oil nozzle assembly and torque the center bolt to 30 inch-lbs (3.4 N-m).

   g. Reattach oil nozzle to primary air tube.

   h. Reattach the burner backplate to the burner body.

   i. Check to make sure the oil nozzle is at the proper position inside the burner (see Section L)

5. Periodically check all safety equipment, such as pressure switches, solenoid valves, and fuel safety shutoff valves, to make sure they are not clogged with dirt, or in any way inoperative.

6. Check and clean UV scanner lenses as conditions dictate to keep them clean of dirt and dust.

7. Periodically, check and clean the air openings around the burner front.

8. To prevent vibration and misalignment, periodically check to make sure that the secondary air sleeve locking bolt, spin vane adjusting ring locking bolt, and flame holder cone locking bolts are tight.

9. Periodically check air/fuel ratio to ensure that the burner is operating at peak efficiency. Exhaust gas analysis can be performed with most commercially available gas analyzers.

T. RECOMMENDED SPARE PARTS

ITEM	QTY	PART NO.	DESCRIPTION
1	1	16847	Control Motor, Med. Torque (SJ 075-580 only)
2	1	20627	Control Motor, High Torque (SJ 750-980 only)
3	2	20579	UV Scanner
4	1	20533	Low Fire Limit Switch w/Adjustable Lever
5	1	84447832	Air Pressure Switch 12-60"wc (3 - 15 kPa)
6	1	47783x	Spark Igniter Assembly
7	1	15773	Gas Pilot Solenoid Valve

Table 9. Recommended Spare Parts

NOTE: See respective StarJet Burner's Parts List for correct "x value" for Spark Igniter Assembly.

DRYER DRUM GAS ANALYSIS FOR NATURAL GAS, OIL AND LP

Gas analyses are used to indicate the air/fuel ratio and to indicate the degree of completeness of combustion. If the mixing is poor, an excess of air must be supplied so that every particle of fuel will contact some air and burn. Unburned fuel is simply wasted since it does not contribute heat to the process.

A critical step in every dryer drum gas analysis is the placement of the sample tube. The applicability of the readings depends directly on the location from which the sample is drawn. To give you an idea of the recommended placement, we have included a drawing in this section. Refer to “Typical Sample Tube Installation for Dryer Drum Gas Analysis”.

The procedures used to make an accurate gas analysis vary not only with the method employed but also with the manufacturer of the equipment. In most instances good readings require that the manufacturers instructions be adhered to rigidly.

Conditions to perform a good analysis.

1. Use a reliable gas analyzer.
2. Sample pipe **must** be installed in the dryer drum to eliminate reading stray O_2, overheated RAP, or overheated AC.
3. Sample should be taken with average tonnage, moisture and firing rates.
4. Allow at least 10 to 15 minutes running time at production rates before taking readings.
5. Sample tubing from the sample pipe to the analyzer should be as short as possible. Tubing should be approximately 1/4 inch (6.4 mm) I.D. rubber, plastic, or silicone.
6. Gases should be sampled until instrument settles out, normally a few minutes depending on sample line size, length, and pump volume.

Interpretation of Gas Readings.

EXAMPLE

Assuming a drum gas analysis is taken at production rates.
Readings Taken: O_2 - 4%
CO - 2000 PPM
Combustibles - 2%

Problem: 4% O_2 - is too low
CO - is too high
Combustibles are too high

Solution: **Gradually** reduce fuel flow or increase air flow while watching O_2, CO, and combustibles. Typically the following will occur – O_2 will increase, CO will decrease, and combustibles will decrease. Reduce fuel until minimal amount of combustibles are present. Then reduce fuel by a small amount for a safety margin.

NOTE: Typically some CO and combustibles will always be present.

Variables Affecting the Combustion Process.

1. Poor atomization of fuel: Atomizer contamination with particulate. Air passages clogged.
2. Poor oil: Oil laden with particulate and unburnables.
3. Switching fuels: Light to heavy oils, LP to butane.
4. Flame shape.
5. Stray air: Poor drum seals, larger than necessary feed openings, draft to high.
6. Inadequate combustion zone.
7. Material veiling thru flame: Interrupts burning, creating high CO and high combustibles.
8. Overheating RAP or AC.
9. Contaminated material.

BATCH PLANT

TYPICAL SAMPLE TUBE INSTALLATION FOR DRYER DRUM GAS ANALYSIS

W7406
(NOT TO SCALE)

DRUM MIX PLANT

TYPICAL SAMPLE TUBE INSTALLATION FOR DRYER DRUM GAS ANALYSIS

W7407
(NOT TO SCALE)